ACPL ITEM
DISCARDED

DEPARTMENT OF THE INTERIOR
BUREAU OF RECLAMATION

WELDING MANUAL

621
Ur3w

B & T

*
vz671
Un3w
815180

REFERENCE

ALLEN COUNTY PUBLIC LIBRARY

Sto
Rev

ACPL ITEM
DISCARDED

JUL 1 1953

UNITED STATES
DEPARTMENT OF THE INTERIOR
BUREAU OF RECLAMATION

WELDING MANUAL

A RECLAMATION MANUAL
SPECIALIST SUPPLEMENT

First Edition
Denver, Colorado
June 1953

UNITED STATES
GOVERNMENT PRINTING OFFICE
WASHINGTON : 1953

For sale by the Superintendent of Documents, U. S. Government Printing Office, Washington 25, D. C., and the Bureau of Reclamation, Denver Federal Center, Denver, Colorado, Attention: 841.

Price $1.75

(Postage not required in Canada, Central and South America, Cuba, Dominican Republic, Haiti, Mexico, Spain, and the United States and its territories and possessions.)

PREFACE

815180

This first edition of the Welding Manual was prepared for engineers and inspectors interested in the design, construction, inspection, and testing of welded pressure vessels, pipes, and structures used by the Bureau of Reclamation. It gives essential information in a brief, convenient form for use in the construction of steel pipes, tanks, hydraulic machinery, bridges, buildings, and supports.

The manual supersedes the tentative edition of the Arc-Welding Manual, published in 1950, which superseded the Welding Inspection Manual, published in March 1942. The Welding Inspection Manual, which was issued in pamphlet form, gave general rules for welding design, procedure, and inspection, and included a number of drawings showing welding symbols and procedures for qualification tests. The Arc-Welding Manual, which followed, presented similar material with the addition of brief chapters on the design and construction of steel pipe, tanks, and miscellaneous welded steelwork for machinery and buildings. It also included notes on welding metallurgy, welding materials and electrodes, protective coatings, and a glossary of technical and metallurgical terms. The Arc-Welding Manual was issued in tentative edition in pocket-size format. Copies were distributed to engineers, inspectors, and construction personnel interested in welding, inviting comment. The suggestions received have aided greatly in preparation of this first edition of the Welding Manual.

The first four chapters of the Welding Manual are devoted to the discussion of welding as applied especially to steel structures and pressure vessels, and chapter V discusses welding inspection and tests. In contrast with the earlier manuals on welding, the Welding Manual also includes information in chapter VI on joining nonferrous metals and information in chapter VII on surfacing and metallizing. Appendix I defines words and terms used in steel making practice, and appendix II gives a brief discussion of the metallurgy of welding. In the last part of chapter I is a glossary of welding terms. In general, an attempt has been made to include sufficient welding data to enable remote projects to supervise the welding of test plates in their locality, qualify welders, and possibly con-

trol the welding procedure on smaller jobs without the expense of bringing welding inspectors from distant centers.

The Welding Manual was prepared by engineers of the Design and Construction Division of the Bureau of Reclamation in Denver, Colo., under the direction of the Chief Engineer. It is one of a series of specialist manuals issued in handbook form as integral parts of the Reclamation Manual. The draft was prepared by engineer P. J. Bier and was reviewed by F. Heidinger, W. H. Strange, and V. F. Wetmore, engineers of the Mechanical Branch. Chapters VI and VII were contributed by engineer Frank Tessitor of the Materials Laboratory. Final editing was done by E. H. Larson.

CONTENTS

Section		Page
Preface		III

CHAPTER I—WELDING

1.	Applications of welding	1
2.	Welding methods and procedures	1
3.	Welding positions	5
4.	Types of joints and weld preparation	5
5.	Welding equipment	10
6.	Stress effect of welding	13
7.	Tack welds	16
8.	Welding defects	16
9.	Repair of welding defects	20
10.	Metal cutting	20
11.	Glossary of welding terms	22
12.	Welding symbols	55

CHAPTER II—WELDING MATERIALS

13.	Types of steel	61
14.	Types of electrodes	62
15.	Electrode requirements	74

CHAPTER III—WELDING CODES AND SPECIFICATIONS

16.	Welding codes	81
17.	Welding specifications	82
18.	Specifications for electrodes	83

CHAPTER IV—WELDING DESIGN

19.	General	87

A. STEEL PIPE

20.	Pipe shell	87
21.	Pipe stiffeners and supports	88
22.	Joint design	89
23.	Flanged connections	93

B. STEEL TANKS

Section Page
24. Types of tanks 94
25. Tank shell 95

C. MISCELLANEOUS WELDED STEELWORK

26. Buildings and bridges 96
27. Hydraulic gates and machinery 97

CHAPTER V—INSPECTION AND CONTROL TESTS

28. Specifications requirements 101
29. Welding inspection in general 102
30. Inspection of steel pipe and tanks 102
31. Tolerances for steel pipe 105
(a) Over-all length of pipe sections 105
(b) Spacing of support rings 106
(c) Continuity of adjoining plates in pipe courses and pipe sections 106
(d) Trueness of ends of pipe sections to be butt-welded or provided with flanges 106
(e) Clearances in bell-and-spigot type field girth joints 106
(f) Clearances in expansion joints 106
(g) Out-of-roundness of pipe shells 106
(h) Tolerances for underground pipelines 107
(i) Dished heads 107
(j) Matching plates of unequal thickness 107
(k) Weld reinforcement 107
32. Inspection of structural steelwork 107
33. Welding procedure tests 108
(a) Number of test welds required 110
(b) Method of testing specimens 110
(c) Test results required 112
(d) Records 112
34. Tests of welders 112
(a) Test procedure 112
(b) Method of testing specimens 115
(c) Test results required 115
(d) Retests 116
(e) Period of effectiveness 116
(f) Records 116
35. Records of welder's tests 116
36. Welders' certificates 116
37. Radiographic inspection 118

Section Page
38. Interpretation of radiographs 121
39. Magnaflux inspection 124
40. Hydrostatic pressure tests 126
41. Fluorescent penetrant inspection 127
42. Metallographic tests 129
43. Inspection of shop assembly and marking 131
44. Inspection of loading prior to shipment 134

CHAPTER VI—JOINING VARIOUS MATERIALS

45. Cast iron and cast steel 135
46. Reinforcing steels 137
47. Welding stainless steel 149
(a) Straight chromium (400 series) types 149
(b) Austenitic (300 series) types 150
(c) Eliminating weld build-up in joining stainless steels 152
48. Monel metal 154
49. Copper silicon alloy 155
50. Copper 155
51. Joining aluminum 156

CHAPTER VII—SURFACING AND METALLIZING

52. Welded surfaces 159
53. Metallizing 160

BIBLIOGRAPHY

Bibliography 167

APPENDIX I—STEEL-MAKING PRACTICE

1. Introduction 169
2. Rolling data 169
3. Alloying elements and their effects on steel 171

GLOSSARY OF TERMS

4. Steel-making terms 173
5. Heat treatment of steel 175
6. Physical properties of metals 177
7. Physical tests of metals 179
8. Miscellaneous terms 181

APPENDIX II—WELDING METALLURGY

Section		Page
1.	General	191
2.	Crystal theory	191
3.	Effect of cooling	192
4.	Effect of carbon	193
5.	Theory of failure	193
6.	Notch effect	194
7.	Transition temperature	197
8.	Welding stresses	197
9.	Thermal stress relieving	200
10.	Peening	201
	Index	203

CHAPTER I—WELDING

1. Applications of Welding.—Welding as a means of fabricating metal structures and machines has gained wide acceptance. It is rapid, economical and, when performed by competent operators, produces joints of excellent quality. The use of welding has greatly increased the range of structures which can be fabricated from steel. Castings of iron or steel, for example, have been replaced with welded steel at considerable savings in weight. Also, with the use of welding and flame cutting, pressure vessels are being fabricated from heavier steel sections than is possible with riveting.

Although the most common applications of welding by the Bureau of Reclamation are for joining members of steel structures and fabricating pressure vessels, welding methods are also used extensively and successfully to join stainless steels, monel metal, aluminum alloys, and copper-silicon alloys. The related methods of brazing and soldering are used to join aluminum alloys, copper, and copper alloys. A comparatively recent development is the use of arc welding or spray welding, with subsequent machining or grinding, to build up surfaces of extremely hard or corrosion-resistant alloys on worn or eroded machine parts. With this process it is frequently possible to place a machine part in better-than-new condition at a small fraction of the cost of a new part.

2. Welding Methods and Procedures.—Among the welding methods generally employed for the fabrication of steel are metal-arc welding, carbon-arc welding, atomic-hydrogen welding, forge or fire welding, oxyacetylene or gas welding; submerged melt, resistance, and thermit welding; and the allied applications of brazing and hard surfacing. Most of these welding methods may be either manual or automatic. This manual deals primarily with arc welding. The electric arc is particularly suitable as a source of energy for welding because the heat may be effectively concentrated. In arc welding, the pieces of metal to be welded together are brought to the required welding temperature by the heat liberated at the arc terminals and in the arc stream so that the metals are completely fused together, forming a single homogeneous mass after solidification.

An electric arc is a sustained spark which is formed between the work to be welded and the electrode held in a holder. At the instant the arc is formed, the temperature of the electrode and of the work at the point of welding rises to approximately 6,500° F. This tremendous heat melts a small pool of metal in the work. Additional metal required is derived from the electrode when the metal-arc process is used or, in case of the carbon-arc process, by a filler rod fed into the arc and melted. Filler rod may be used with either metallic or carbon electrodes. In the metal-arc process, the arc occurs between the work to be welded and a metallic wire, while in the carbon-arc process the arc is formed between the work and a carbon rod held in the electrode holder. Because carbon-arc welding is a puddling process, it is not applicable to vertical or overhead welding. It is, however, very adaptable to use with automatic welding machines, and the carbon arc can be used as an economical means of flame cutting. In the metal-arc process, the tiny globules of molten metal from the tip of the metallic wire are forced across the arc and deposited in the molten seat of the work. This permits the use of metal-arc welding for overhead work. Figure 1 illustrates the various arc-welding procedures used.

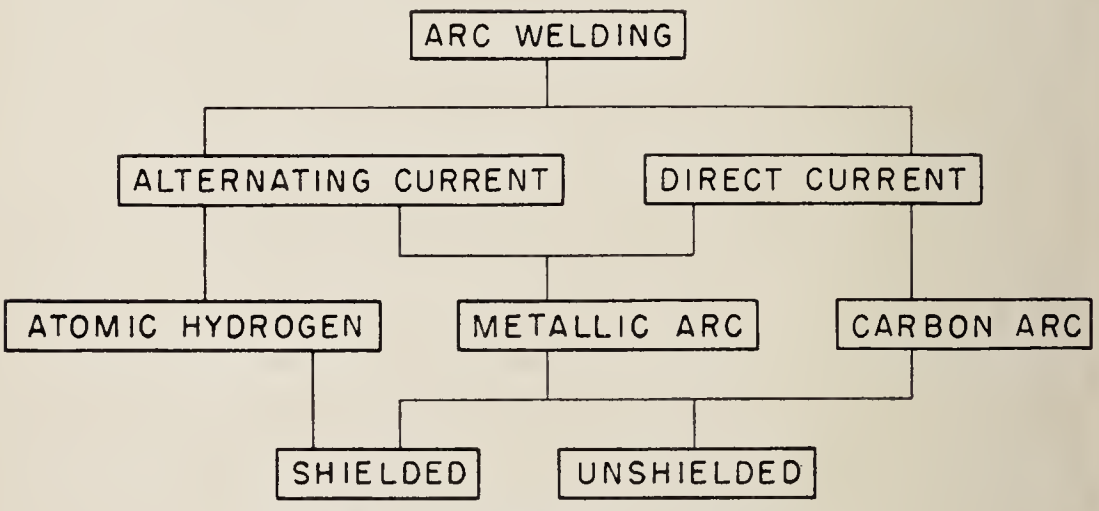

Figure 1—Arc-welding procedures.

A shielded arc protects the molten metal from contact with the ambient atmosphere and consequent chemical combination with oxygen and nitrogen, with their resultant weakening and embrittling effect on the weld deposit. In manual welding, shielding is obtained with heavily coated electrodes, the coating giving off large quantities of gas which envelop and shield the arc from the air. In most automatic welding processes, the arc is submerged under a flux powder which

is deposited automatically over the seam to be welded. The combustion of the flux or melt provides an inert gas which shields the molten weld metal from the surrounding air. The slag formed from the flux floats on top of the molten metal and protects it from the atmosphere while cooling. This has an annealing effect on the weld deposit which improves its physical properties.

In the submerged welding process known as the Unionmelt automatic welding process, the flux consists of a finely crushed mineral composition. It is deposited along the seam to be welded, in sufficient depth to completely cover the end of the electrode at all times during the welding operation. This automatic welding process uses heat generated by the passage of current between a bare electrode and the work being welded. High current densities can be used and the entire welding action takes place underneath this granulated welding composition, which is illustrated in figure 2. Because

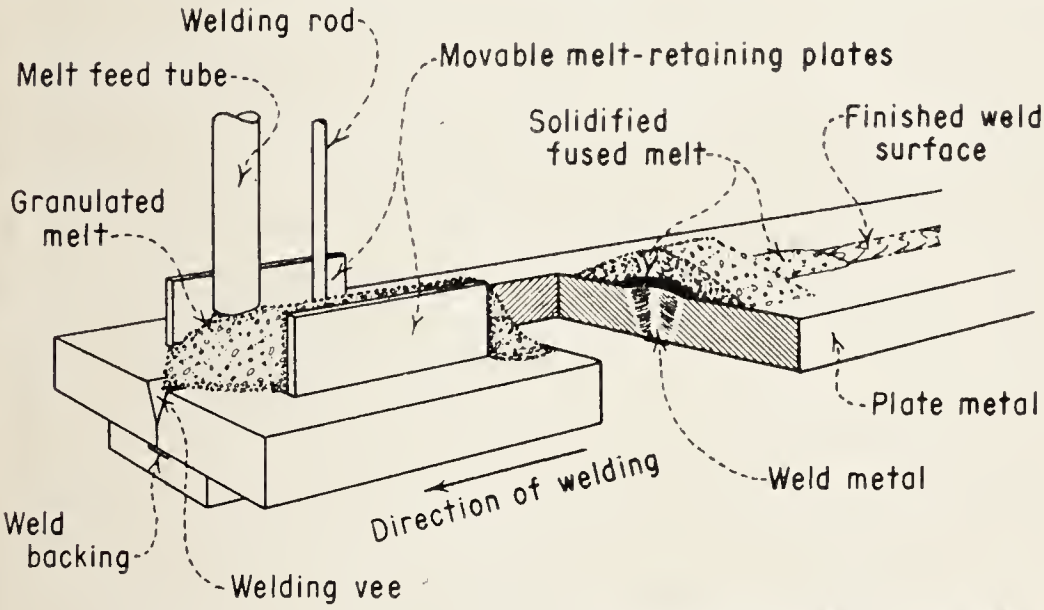

Courtesy Linde Air Products Co.

Figure 2—Submerged-melt butt-weld process.

of the heat-insulating capacity of the flux, intense heat is concentrated in a relatively small zone in which the welding electrode and base metal are rapidly fused. Welding must be done in an approximately horizontal position so that the fluid materials will not run out of the welding zone. With this method of welding, larger deposits of weld metal may be made in a single pass than is possible with manual welding. Figure 3 shows a macro-etched cross section of a two-pass butt weld made by the submerged welding process in 2½-inch thick firebox quality steel plate. The weld discloses a distinct dentritic structure.

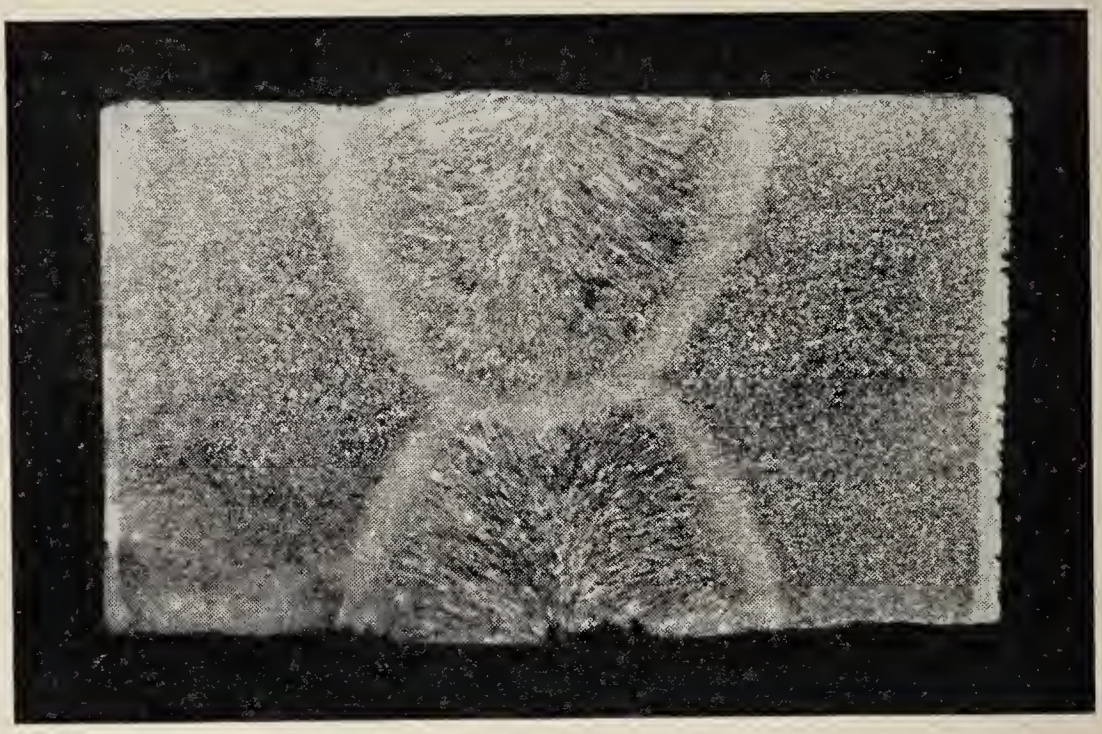

Figure 3—Macrograph of a two-pass butt weld in 2½-inch plate showing crystalline structure.

One of the great advantages of two-pass submerged-arc welding is its deep penetration, which permits material of considerable thickness to be welded without edge preparation or with only small grooves. The larger portion of the weld metal is derived from melting the parent metal. Therefore, it is generally advantageous to use the two-pass method in preference to the multiple-layer welding in which more metal must be deposited at a slower rate because of the lower current used. Although the two-pass process can be used for thickness up to 4 inches or more, there is a practical limit of thickness beyond which the multiple-layer submerged-arc-welding technique appears to be the more economical. According to recently conducted research, the upper thickness limit for two-pass submerged-arc welding is somewhere between 2 and 2¼ inches for steels designated by the American Standards for Testing Materials (ASTM) as A–285 grade C and A–201 grade A, and between 1½ and 1⅓ inches for steels designated as A–212 grade B.

The welding quality of steel is influenced by the carbon content and by certain alloying elements. When steel is to be welded with ordinary procedures, it is desirable to limit the carbon content to less than 0.35 percent as larger amounts of carbon impart air-hardening properties to the steel which induce cracking. Manganese and silicon contents should be within limits that will not contribute to embrittlement of the

welds. Phosphorus and sulfur should be within the accepted maximum values specified for steel manufacture.

3. Welding Positions.—Wherever possible, welding should be performed in the flat or downhand position. This is especially required for submerged-arc welding, which so far has not been successfully used in the vertical and overhead positions. In circumferential shop welding of pipe, suitable power-driven rollers may be used to rotate the pipe sections being joined at a speed consistent with the rate at which the filler metal can be properly deposited. On installed pipe which cannot be rotated, welding must be applied in all positions. Fixed-position welding requires special care in depositing successive beads or layers uniformly around the joint in order to avoid excessive stress concentrations or distortion due to uneven heat distribution. The assembly or pipe system should be positioned so that the joints are readily accessible to the welder from all points and to allow ample space for preheating or stress relieving where required.

There is no universally accepted direction of welding girth joints on pipe in the horizontal fixed position. In metal-arc welding the preferred direction seems to be from the bottom upward. Considerable welding of thin or medium-thickness pipe, however, is done in the opposite direction, that is, from the top downward. Ordinarily, more metal per layer is deposited when welding upward, but welding downward probably requires more skill to secure adequate fusion with the side walls and to avoid trapping of slag.

Figure 9 shows the four positions used in manual welding.

4. Types of Joints and Weld Preparation.—The two principal types of welded joints, as determined by the shape of the weld, are the groove weld and the fillet weld. Typical examples of such welds are shown in figures 30 and 31. The groove welds, also known as butt welds, require edge preparation of the parts to be welded together, except for thicknesses up to 3/16 inch or 1/4 inch for manual welds, and up to 1/2 inch for submerged-arc welds. For these thicknesses the welds may be applied on abutting square edges, using backing strips for greater joint efficiency. For the longitudinal joints of pipes, only butt welds are used; for circumferential joints welded in the shop, usually butt welds; and for circumferential joints welded in place in the field, either butt or lap welds. Figure 4 (5 sheets) shows the various types of groove joints used and recommended proportions of grooves for such joints applied to steel. The welding grooves were designed to secure com-

plete penetration with shielded-metal-arc welding or gas welding. These joints may be varied to be suitable for other materials by giving proper consideration to base-metal melting characteristics, heat effect, heat input, joint penetration obtainable, and accessibility. Figure 4 (sheet 5) also shows recommended proportions of plug welds and slot welds.

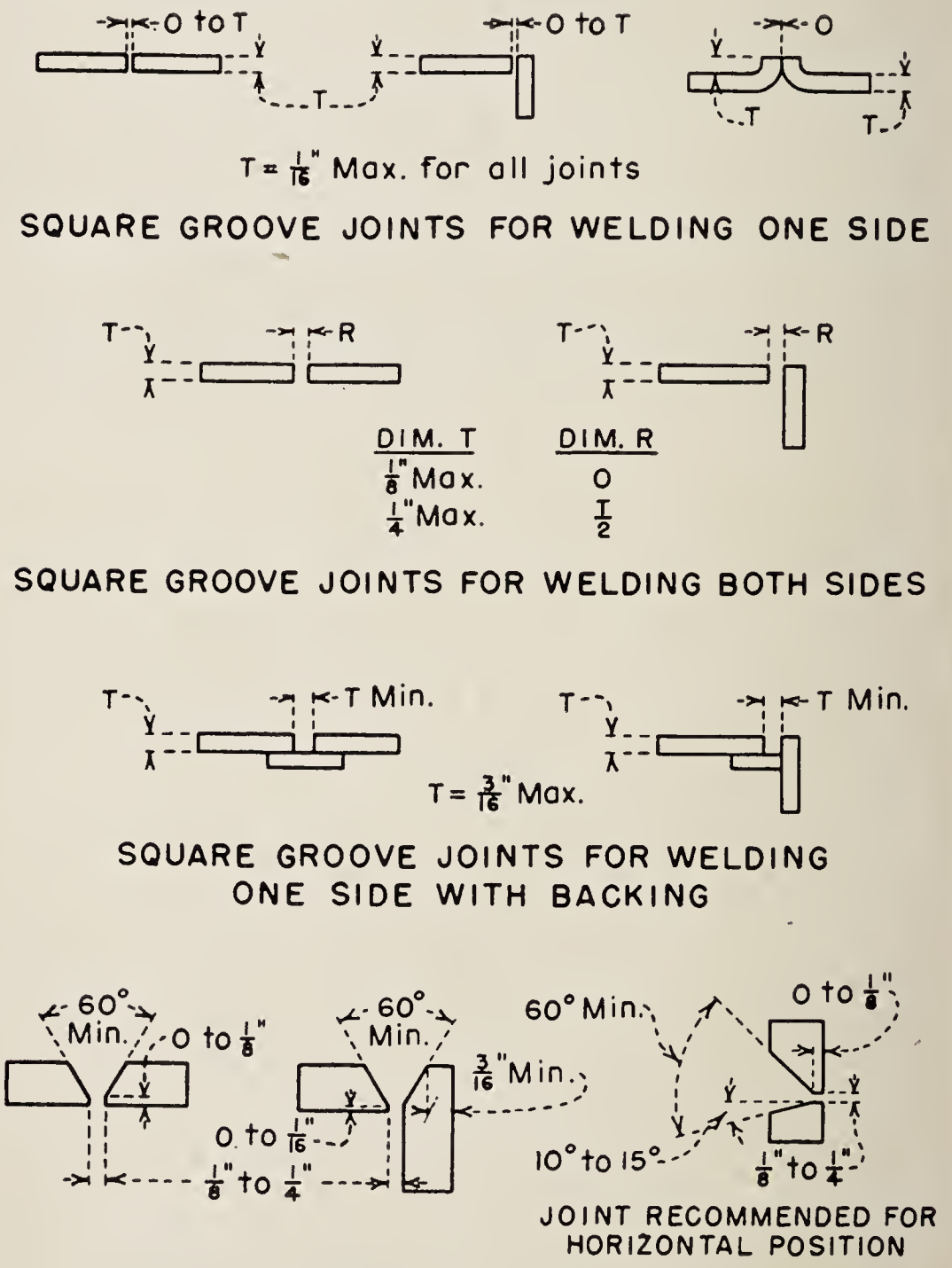

Figure 4—Recommended proportions of grooves for metal-arc welding and gas welding (except pressure gas welding). (Sheet 1 of 5.)

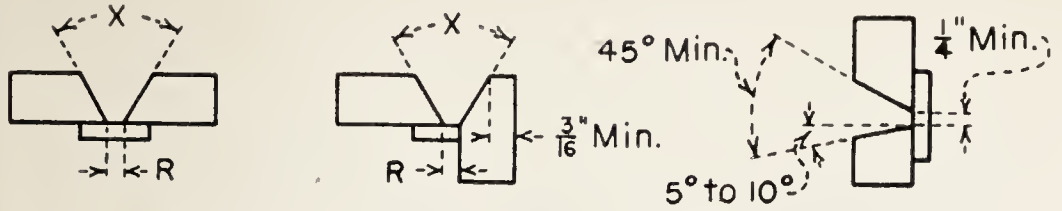

ANGLE X	DIM. R	POSITIONS
45° Min.	1/4" Min.	All
20° Min.	1/2" Min.	F, V, O
12° Min.	1/2" Min.	F

JOINT RECOMMENDED FOR HORIZONTAL POSITION

SINGLE-VEE-GROOVE JOINTS FOR WELDING ONE SIDE WITH BACKING

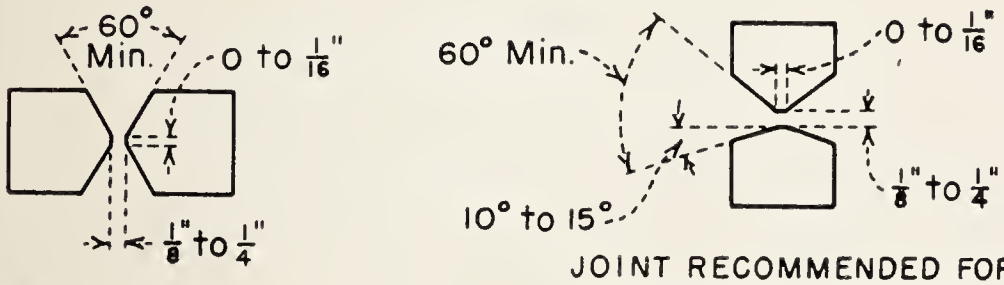

JOINT RECOMMENDED FOR HORIZONTAL POSITION

DOUBLE-VEE-GROOVE JOINTS FOR WELDING BOTH SIDES

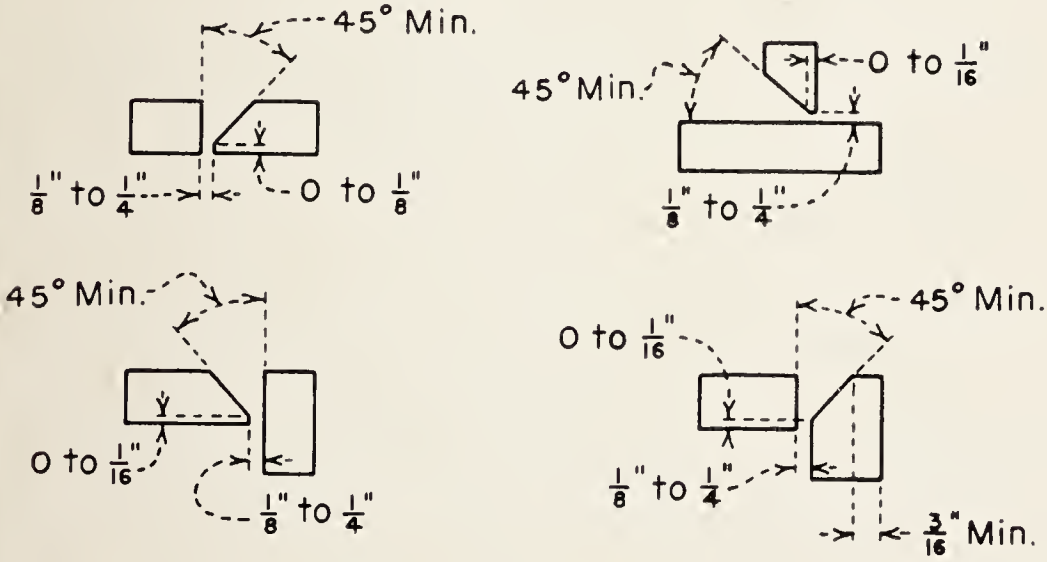

SINGLE-BEVEL-GROOVE JOINTS FOR WELDING ONE OR BOTH SIDES

Figure 4—Recommended proportions of grooves for metal-arc welding and gas welding (except pressure gas welding). (Sheet 2 of 5.)

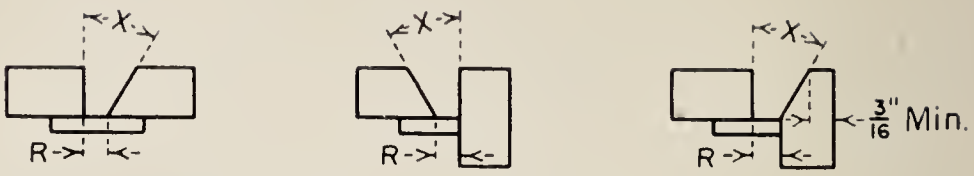

ANGLE X	DIM. R	POSITIONS
45° Min.	1/4" Min.	All
35° Min.	3/8" Min.	All
25° Min.	3/8" Min.	F, V, O

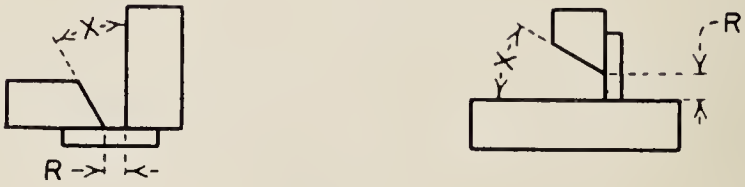

ANGLE X	DIM. R	POSITIONS
45° Min.	1/4" Min.	All
35° Min.	3/8" Min.	All

SINGLE-BEVEL-GROOVE JOINTS FOR WELDING ONE SIDE WITH BACKING

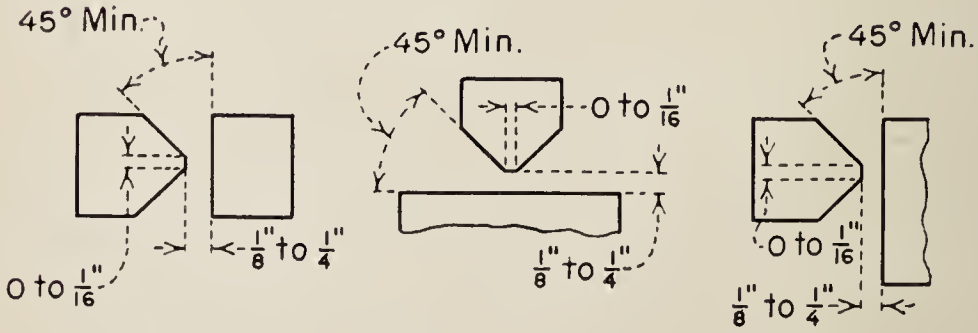

Figure 4—Recommended proportions of grooves for metal-arc welding and gas welding (except pressure gas welding). (Sheet 3 of 5.)

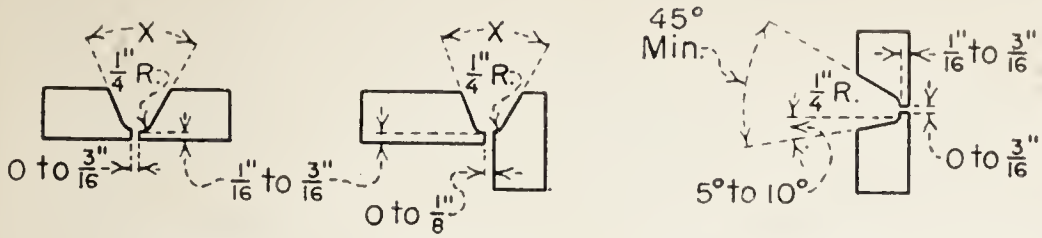

ANGLE X	POSITIONS
45° Min.	All
20° Min.	F, V, O
12° Min.	F.

JOINT RECOMMENDED FOR HORIZONTAL POSITION

SINGLE-U-GROOVE JOINTS FOR WELDING ONE OR BOTH SIDES

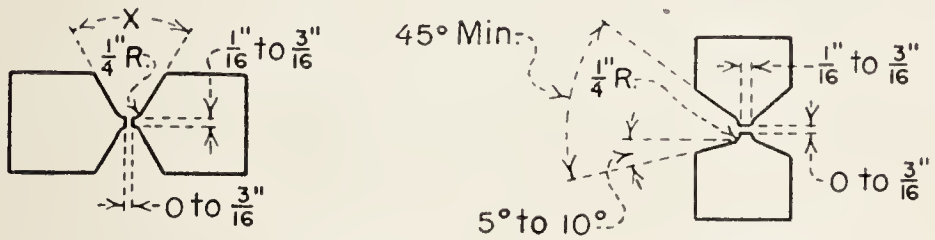

ANGLE X	POSITIONS
45° Min.	All
20° Min.	F, V, O

JOINT RECOMMENDED FOR HORIZONTAL POSITION

DOUBLE-U-GROOVE JOINTS FOR WELDING BOTH SIDES

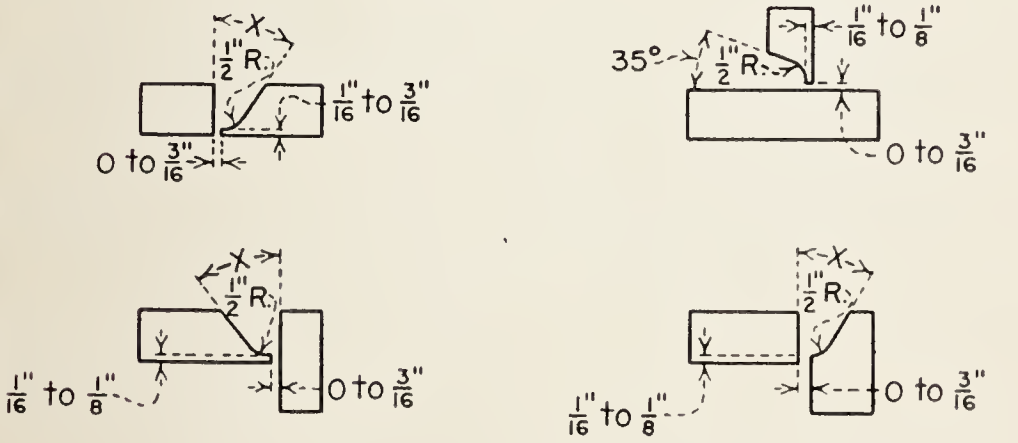

ANGLE X	POSITIONS
35° Min.	All
25° Min.	F, V, O

SINGLE-J-GROOVE JOINTS FOR WELDING ONE OR BOTH SIDES

Figure 4—Recommended proportions of grooves for metal-arc welding and gas welding (except pressure gas welding). (Sheet 4 of 5.)

244795—53——2

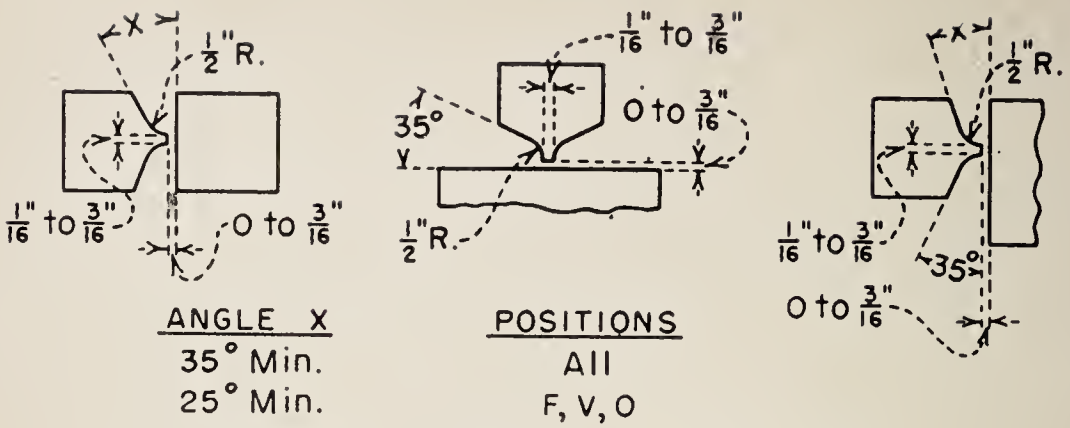

ANGLE X	POSITIONS
35° Min.	All
25° Min.	F, V, O

DOUBLE-J-GROOVE JOINTS FOR WELDING BOTH SIDES

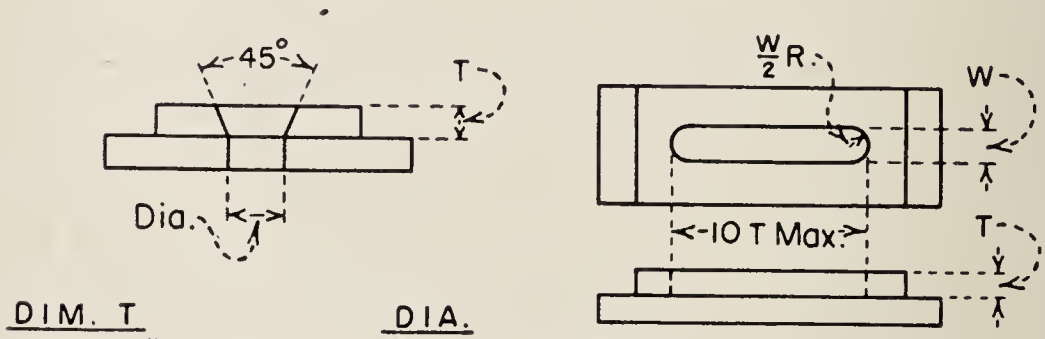

DIM. T	DIA.
Under 1/8"	1/4" Min.
1/8" to 1/2"	2T Min
Over 1/2"	T + 1/2"

DIM. T	DIM. W
Under 1/4"	2T Min.
1/4" & over	1 1/2" T Min.

JOINT FOR PLUG WELD JOINT FOR SLOT WELD

Figure 4—Recommended proportions of grooves for metal-arc welding and gas welding (except pressure gas welding). (Sheet 5 of 5.)

For welds applied by Unionmelt welding, grooves as shown in figure 5 are recommended. The section at the top of the figure shows a weld applied to square-edged plates ½ inch and less in thickness without special edge preparation.

As the preparation of joints has an important bearing on the cost of welding, selection of the type of joint should be given careful consideration. Table 4 in section 15 shows the electrode requirements for various types of joints, and may be used in making comparative cost estimates.

5. Welding Equipment.—Arc welding requires a continuous supply of electrical current of ample amount and at proper voltage. Manual welding is generally performed with voltages between 15 and 45 and currents between 120 and 225 amperes, although in some cases currents as high as 750 amperes are used. For automatic welding, 40 to 120 volts and 600 to 1,800 amperes are used.

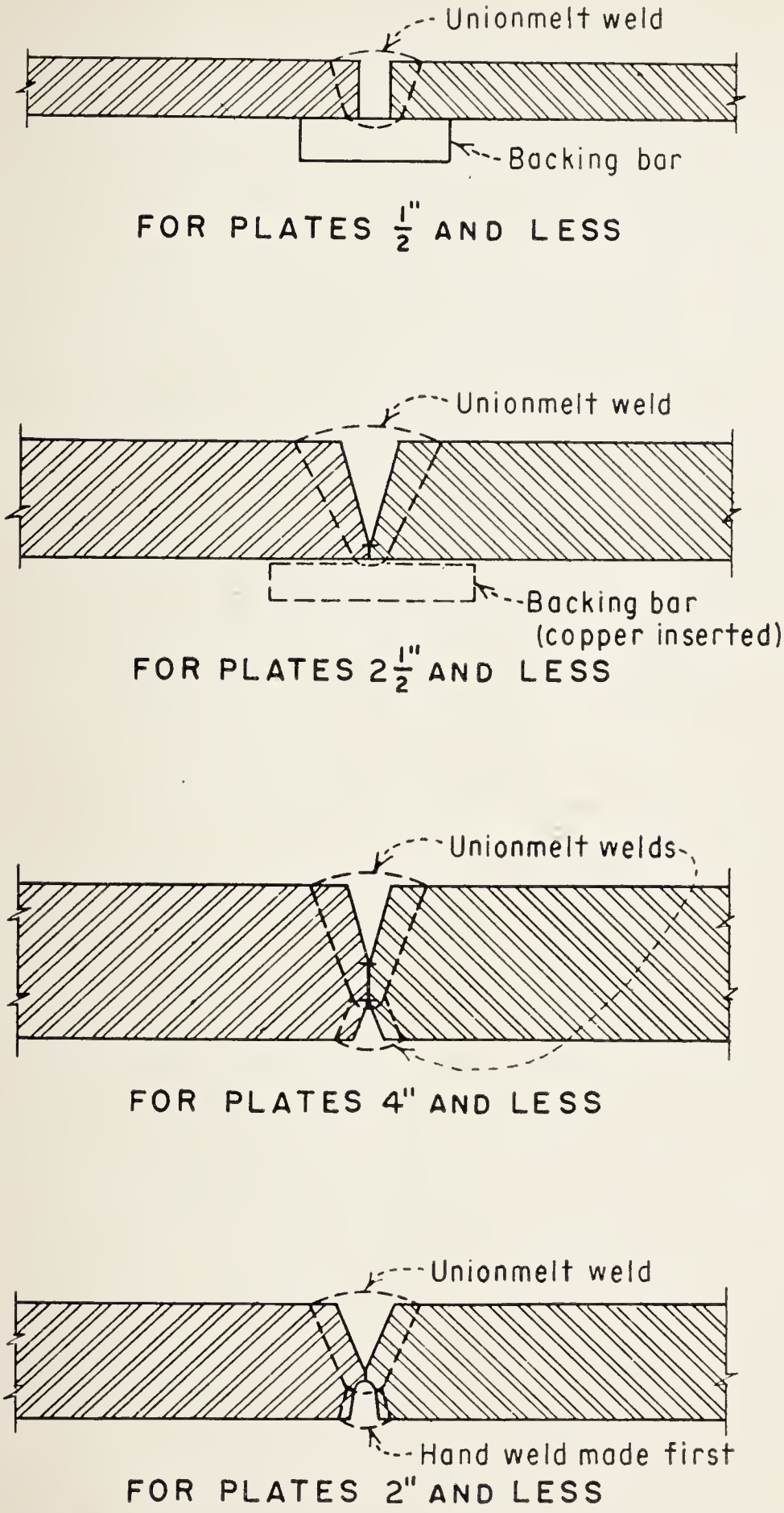

Courtesy Linde Air Products Co.

Figure 5—Edge preparation for Unionmelt welds.

Either alternating- or direct-current welding machines may be used for shielded-arc welding. Practically all alternating-current machines are of the single-operator, static-transformer type. This equipment has a volt-ampere characteristic approaching the constant form. Multiple-operator units have a constant-voltage characteristic and require a ballast resistor or reactor for each welding operator to regulate the current delivered to the arc. Alternating-current arc-welding machines of the transformer type are usually made in ratings standardized by the National Electrical Manufacturer's Association (NEMA). Machines having ratings of 500 amperes and over are mainly used for machine welding with automatic welding heads. For manual arc welding in industrial plants, machines having ratings of 200, 300, and 400 amperes find the widest application. These machines permit the use of electrodes from 1/16 to 5/16 inch. Machines having a 150-ampere rating find their largest application in light industrial welding and in garage and job-shop welding. Single-operator alternating-current machines are single-phase units for a power supply of 220, 440, or 550 volts and for 25, 50, or 60 cycles. Practically all alternating-current welding machines are now equipped with power-factor correcting capacitors and are generally arranged to have a power factor of about 80 percent lagging at rated load.

Motor-driven, single-operator, direct-current welding machines are of highly specialized design, practically all being of the self-regulating, variable-voltage type. They are made in ratings standardized by the National Electrical Manufacturer's Association. Welding machines of 150- and 200-ampere capacity at 30 volts are used for light industrial shielded-metal-arc welding as well as general-purpose shop work. Welding machines of 200-, 300-, and 400-ampere capacity at 40 volts are commonly used for manual and machine welding in industrial plants and for field erection. Machines of 600-ampere capacity, sometimes in pairs, are used almost exclusively for carbon-arc cutting and submerged-arc welding. Single-operator, direct-current machines are available with driving motors of several voltage and frequency ratings. Motor-generator welding machines are usually single units with motor and generator assembled on the same shaft. Induction-motor-driven machines are available for 220-, 440-, or 550-volt, 2-phase or 3-phase, 60-, 50-, or 25-cycle power supply. Direct-current, motor-driven welding machines are supplied with motors wound for 115, 230, 440, and 550 volts.

The most common driver is the 220/440, 3-phase, 60-cycle induction motor. If electric power is not available, gasoline- or Diesel-engine-driven welding machines will give satisfactory service.

In order to secure a satisfactory weld by the metal-arc-welding process, an arc practically constant in length must be maintained. In manual welding, this is dependent on the skill of the welding operator. With the use of automatic welding equipment, this variable on the part of the operator is eliminated. After adjustment to suitable amperage, the welding head will automatically strike and hold the arc between the electrode and the work to be welded. By thus maintaining a proper arc length, better and more uniform welding may be expected. Automatic welding is performed without manipulation on the part of the operator after the necessary adjustments have been made and the mechanism has been started. The electrode is fed toward the arc at the exact rate which will maintain the proper arc length. There are many methods used to control the arc and feed the electrode automatically. The various types of machines are composed of the following parts:

(a) A motor to feed the electrode.

(b) Some means of control to strike and maintain the proper arc length.

(c) A means of conducting the electric current into the electrode.

In automatic welding, the welding current is usually conducted to the electrode by means of a copper nozzle, through which the electrode is driven by an automatic head. The major portion of automatic metallic-arc welding is done with bare or very lightly coated electrodes.

Figure 6 shows the submerged welding process applied to the circumferential seam of a 15-foot diameter penstock. The pipe is rotated, and the welding head, which is supported from a cantilever beam reaching into the pipe, is stationary. Figure 7 shows a manually guided, portable Unionmelt welding machine depositing a longitudinal weld in a large pipe. This machine can also be used for the circumferential seams, the pipe being rotated and the machine remaining stationary.

6. Stress Effect of Welding.—Residual welding stresses are inherent in all welds, being a function of the rigidity of the parts welded together, the restraint placed on their movement, and the thickness of the material that is welded. An ideal weld would require a minimum amount of deposited weld metal, which would produce a minimum of strain and dis-

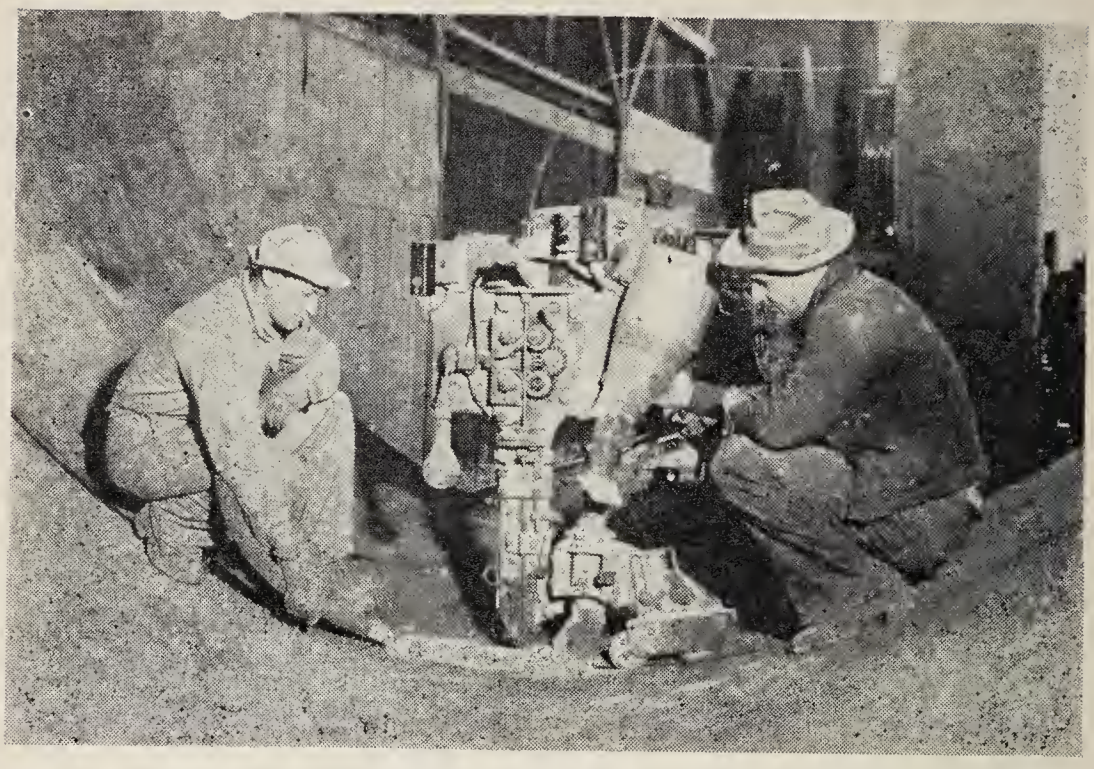

Figure 6—Automatic welding machine making submerged melt weld of a butt joint on 15-foot diameter penstock.

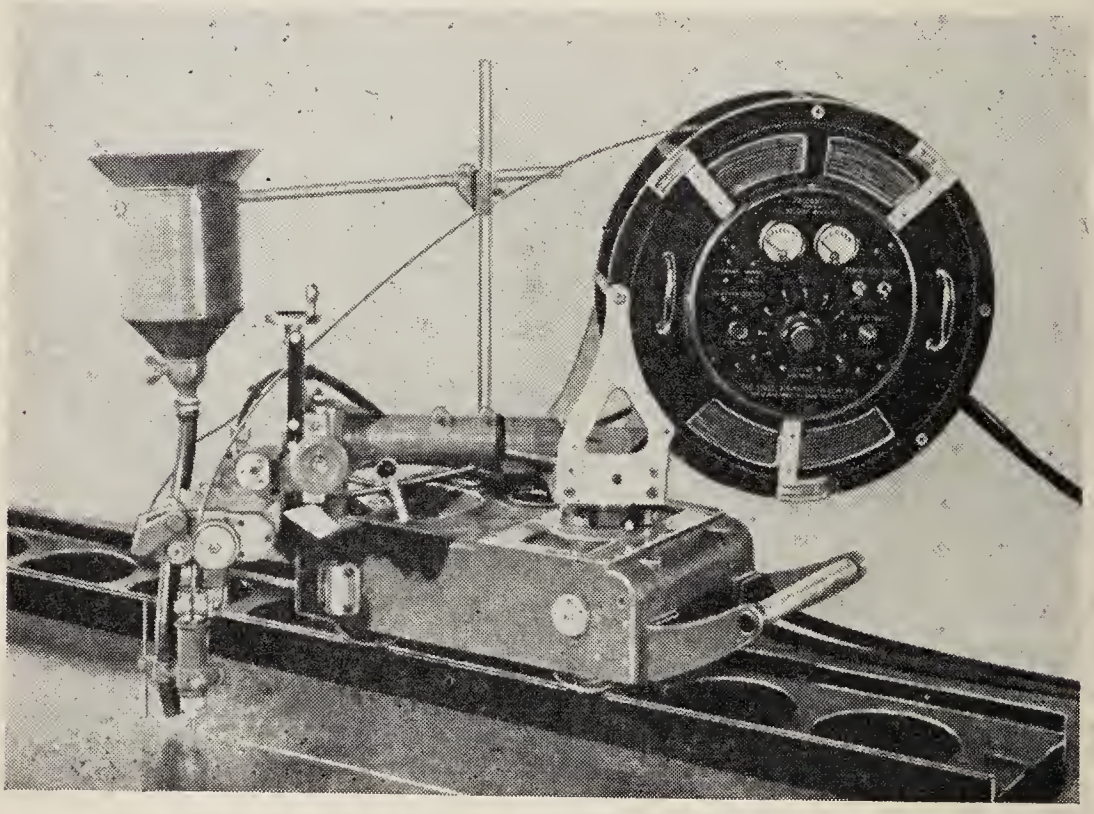

Figure 7—Portable Unionmelt welding machine.

tortion. The amount of distortion increases with the width of the welding groove, necessitating an increasing quantity of weld metal and heat input. For that reason, double-welded butt joints are recommended for metal thicknesses of 1 inch and over where it is possible to weld a joint from both sides. Distortion can be minimized by welding symmetrically on both sides of the joint.

The residual stresses may be reduced by permitting, as much as possible, free movements of the parts welded and by mechanically stress relieving each pass by means of peening. Excessive peening, however, should be avoided as it may introduce additional stresses and cause flakiness in the welded joint. The amount of peening may be controlled by extensometer readings across the joint (see appendix G of the "Code for Unfired Pressure Vessels," sponsored by the American Petroleum Institute (API) and the American Society of Mechanical Engineers (ASME), 1951 edition). This has been done successfully with slip joints of embedded pipe located at contraction joints in concrete dams where the pipe was restrained against longitudinal movement caused by shrinkage in the weld. Welds made with the high-speed, single-pass process do not develop as much distortion as do those made with the multiple-pass process.

In the light sections which can deform without failure, the stress effects of welding are of minor importance. As the thickness of the metal and the rigidity of the structure are increased, the capacity to deform without failure is reduced. It is often desirable to stress-relieve such structures in a special furnace to eliminate excessive residual welding stresses.

Welds may be built up by forming weave beads or parallel stringer beads, with deposits having a maximum width of four times the nominal diameter of the electrode. Weave beads are deposited by oscillating the electrode at right angles to the direction of travel (see fig. 12). They produce a higher ductility in the weld metal than that resulting from the use of stringer beads, which are deposited without oscillating the electrode (see fig. 28). For best results, vertical welds should be made by depositing the metal in the upward direction.

In general, welds made with heavily coated electrodes are more resistant to corrosion than welds made with bare electrodes. Welds should be thoroughly cleaned to retard corrosion.

Where riveting occurs near welded joints, the riveting should preferably be done after the welding is completed. This is

desirable in order to prevent loosening of the rivets by the heat developed during welding.

7. Tack Welds.—After a joint is properly lined up, short tack welds are used to connect parts before the final welding. The tack welds should be of sufficient number and of suitable proportion to hold the parts in place during ordinary handling. They need not be higher than one-half the thickness of the material to be welded nor longer than twice the thickness, with a maximum length of 1 inch and a minimum spacing of 12 inches. Tack welds should be placed so as not to restrict contraction of the members involved. According to the API-ASME and ASME Codes, tack welds in plates over ¼-inch thick should be removed so that they will not become a part of the joint.

8. Welding Defects.—Defects in arc and gas welds consist of dimensional defects, structural discontinuities, and defective properties. Dimensional defects are largely avoidable with proper control of the welding procedure. Warpage or distortion may be controlled by using suitable jigs or welding sequences, or by preforming prior to welding. Deficiencies in the size of welds may be detected by visual examination and gaging with weld gages; these deficiencies may be corrected by using filler metal of the correct size and the proper welding technique. Defects in weld profile should be guarded against. Figure 8 illustrates acceptable weld profiles and some of the more common defects. The excess convexity shown for multilayer welds is usually attributed to improper welding technique. It tends to produce notches which lead to harmful stress concentrations under load. Excess concavity is a defect generally associated with fillet welds and results from using excessive welding heats, which produce very fluid weld metal. Overlap is also a defect most common in fillets welds. It is generally attributed to improper welding technique or welding heat. Excess weld reinforcement in groove welds is undesirable as it tends to stiffen the section unnecessarily, thereby creating a notch effect.

Structural discontinuities are the most common defects in the weld proper. They consist of porosity, slag inclusions, cracks, incomplete fusion, inadequate penetration, undercutting, and surface defects.

Porosity results from the chemical reactions occurring during welding. It is sometimes traceable to the use of improper electrodes or the application of excessive welding currents. Welds made with heavily coated electrodes by the shielded-

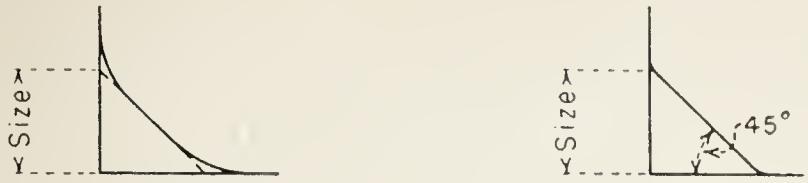

DESIRABLE FILLET WELD PROFILES

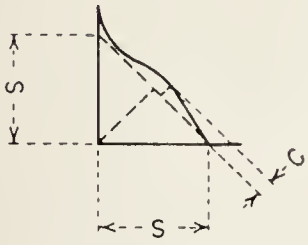

Convexity, C, not to exceed value specified

ACCEPTABLE FILLET WELD PROFILE

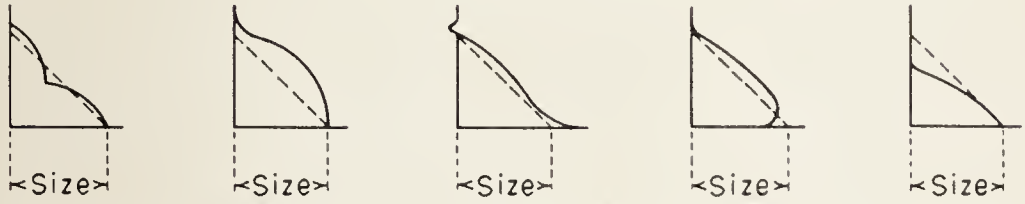

INSUFFICIENT THROAT | EXCESSIVE CONVEXITY | UNDERCUT | OVERLAP | INSUFFICIENT LEG

DEFECTIVE FILLET WELD PROFILES

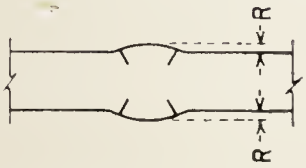

Reinforcement, R, not to exceed value specified

ACCEPTABLE BUTT WELD PROFILE

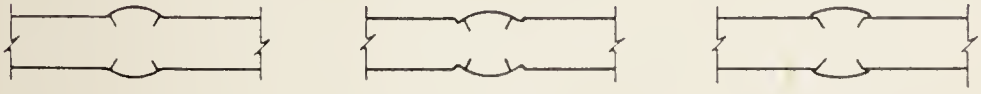

EXCESSIVE CONVEXITY | UNDERCUT | OVERLAP

DEFECTIVE BUTT WELD PROFILES

Figure 8—Acceptable and defective weld profiles.

arc process are inherently sounder than welds made with bare electrodes and unshielded arcs. The weld deposit should be kept molten as long as possible to facilitate the escape of gases and prevent porosity and sponginess.

Slag inclusions in arc welding are generally derived from electrode coating materials which are trapped in the weld. These nonmetallic inclusions may be avoided by use of proper welding techniques and cleaning procedures both before and during welding. The use of filler metal of excessive size, particularly in the first weld bead, is very likely to contribute to slag inclusion in the root area. In multilayer welds, failure to remove all slag between layers will result in slag inclusions in these zones.

Cracking of welds results from the presence of excessive localized stresses. The cracking of welds may be minimized or eliminated by welding procedures adapted to each particular case. When cracks occur during or as a result of welding, little deformation is usually apparent because the shrinkage resulting from welding sets up multidirectional stress systems with the attendant inability of the material to sustain appreciable deformation without failure. For heavy and complicated assemblies, it is common practice to require thermal stress relieving to minimize these effects. By preheating the material to be welded, the cooling rate of the deposited weld metal and the heat-affected zone may be decreased and much of the cracking avoided. Cooling rates may also be decreased and the tendency to cracking may be lessened by use of higher heat inputs—secured through use of larger electrodes, higher welding currents, or slower welding speeds—and also by the slower rate of heat transfer resulting from larger welds. Cracking in welds may further be controlled by avoiding the welding of structures of such rigidity that weld shrinkage in the joint is prevented, and by separating parts to be butt-welded to permit expansion.

Lack of fusion and incomplete penetration may be avoided by using proper electrodes and welding currents, by suitable edge preparation, by using backing strips where practicable, and by separating the edges to be welded. In heavy welds, complete penetration may not be attained by welding from one side only, making it necessary to weld from both sides or to backweld the joint on the under side. Too narrow welding grooves should be avoided and the electrodes should be sufficiently small to insure good penetration at the bottom of the groove. The deposited weld metal should fuse into the

parts to be joined and not curl away from them. Overlapping or rolling of the weld metal is not permissible.

The welding of laminated plates should not be permitted, as experience has shown that welds passing through laminations are susceptible to the development of cracks which follow the laminations in the plate. Under the action of heat, laminations have a tendency to open up. Homogeneity tests, as used for the firebox quality steels, will aid in disclosing laminated areas. Close visual inspection of the plate edges after trimming also aids in detecting laminations. The most effective methods for detecting laminations consist of magnaflux inspection or etching of the plate edges with acid. As such tests are costly, they should be applied only in special cases as a check of visual inspection or to determine the acceptability of material of questionable quality. The danger of laminations will be lessened by using killed or semikilled steels which have been oxidized sufficiently to reduce segregation.

Undercutting is the melting or burning away of the base metal at the toe of the weld. In general, it can be attributed to faulty welding technique. It may be avoided by using proper welding currents and welding speeds; by using electrodes of proper diameter so that the molten metal does not form too large a pool; and by welding uniformly, holding the electrode at the proper angle, and using electrodes for only the types of welding for which they are designed.

Surface defects and poor and irregular surface appearance are usually the result of an improper welding technique, the use of electrodes in an improper position, some inherent adverse characteristic of the electrode, or the carelessness of the welder. Surface irregularities (varying width and height, depressions, etc.) are not in themselves defects of the weld. They indicate, however, a lack of skill on the part of the welder, which is important when considering appearance of the finished job.

Excessive weld spatter is usually due to the use of improper types of electrodes or excessive welding currents. A certain amount of spatter is practically unavoidable. The adherence of spatter may be reduced and its removal facilitated by painting parts adjacent to the weld with "glyptal," "no nox," whitewash, or other suitable material prior to welding.

Departures from the requirements of the specifications and the applicable code should be considered as defects. The physical properties which may not meet the specified requirements include tensile and yield strength, ductility (elonga-

tion), hardness, and impact strength. Similarly, chemical properties may be deficient because of incorrect weld metal composition. In addition to the quality of the weld metal, it is necessary to consider possible defects in the base metal to be welded. The base-metal requirements are controlled by applicable specifications, and departures therefrom should be considered as defects. Properties which may not meet prescribed requirements include chemical composition; cleanliness (laminations, stringers); surface condition (mill scale, paint, grease, oil, etc.); and mechanical properties and dimensions.

9. Repair of Welding Defects.—Defects discovered in the welds should be examined carefully by the inspector to determine the extent of repairs to be undertaken. The defects should be removed entirely by chipping, grinding, or flame gouging before any repair welding is performed. Hairline cracks which are not noticeable by visual inspection may be traced to their ends by acid etching or by magnaflux inspection. Repair welding should be done only by the more skillful welders. A welding technique calculated to retard the cooling rate and reduce shrinkage stresses should be used. Excessive weld reinforcement should be removed by chipping or grinding. Shrinkage stresses may be reduced by peening. Where large weld repairs are involved, the amount of peening required may be determined by extensometer readings across the joint. Weld repairs in steel castings suitable for fusion welding should be made by an approved process. No welding should be done until the defects have been removed to sound metal and the area examined by the inspector. If defects are removed by flame gouging, the casting—especially when of higher carbon content—must be preheated to prevent cracks and checks. Weld grooves made in removing the defects should be wide enough to obtain good penetration. When defects extend through the casting, a weld backing should be used or one or more passes should be applied at the root of the weld. Choice of the electrode is important. For carbon steel castings, class E–6010, E–6011, E–6012, or E–6013 electrodes are generally used. Castings of higher strength are more difficult to weld and require special types of electrodes. All castings with major repair welds which affect their strength, as determined by the inspector, should be reheat-treated.

10. Metal Cutting.—Steel and other metals may be cut and shaped by using either oxygen torches or an arc-cutting procedure of the carbon-arc, metal-arc, or arc-oxygen (also

called oxy-arc) type. Although shearing is generally limited to the cutting of low-carbon steel of about 1½-inch thickness and less for alloy steels, the cutting torch is capable of cutting metal 48 inches or more in thickness. Of the various methods developed, oxygen cutting has found the most extensive use. The cutting torch provides a flexible tool that can easily be transported and can be used for cutting not only straight lines but, by means of mechanical guiding, all manner of shapes to fairly accurate dimensions with smooth edges. Oxygen cutting has been developed to a high degree and its metallurgical, chemical, and mechanical effects on the metal can be evaluated fairly well. There are two methods used—oxygen cutting and oxygen machining. The former includes most severing operations, and the latter includes the various surface-shaping operations. Oxygen cutting may be performed manually or by machine. Mechanically guided oxygen-cutting equipment will result in better workmanship, accuracy, and economy than manual equipment. Modern torches are equipped with separable tips, commonly called cutting tips, in which the oxygen-cutting jet is surrounded at a proper distance by several preheating flames. Tips of different sizes may be readily interchanged in the head of the torch to provide a range of orifice sizes, intensities, and disposition of preheat flames as required to meet different cutting conditions, and to provide the maximum amount of flexibility in the application of the torch.

Oxygen machining includes the processes used for the surface removal of metals. Principal among these is scarfing, or deseaming, which is used to remove cracks or surface seams, scabs, scale, and other defects on the surfaces of blooms, billets, ingots, bars, and other unfinished shapes in steel mills. Gouging is used for the removal of defective welds or tack welds and the removal of welds in scrapping operations. It is also used to remove defective weld metal from the sound metal in the root of a weld. There are other processes, such as hogging, surface planing, oxygen turning, drilling, and lancing, which are used for various purposes.

The carbon-arc and metal-arc methods of cutting are essentially progressive melting operations analogous to arc welding, with similar metallurgical effects. The power input in arc cutting is usually higher than normally used in manual arc welding, and the speed of travel is much faster. Metals which can be welded without requiring a post-heat treatment may be severed by arc cutting without detriment. The physi-

cal effects of arc cutting are similar to those obtained in oxygen cutting, but the surfaces are generally rougher than in oxygen cutting. Chemical changes resulting from arc cutting are similar to those produced by arc welding. The power source for arc cutting is a direct-current welding generator of either the constant or variable potential type. For metal-arc cutting, alternating-current power may also be used. Electrode holders are air-cooled for currents up to 300 amperes and water-cooled for currents above 300 amperes. For metal-arc cutting under water, specially constructed, fully insulated electrode holders are mandatory; straight polarity must be used to protect the holders and the metal parts of the diver's outfit from electrolytic corrosion.

For oxy-arc cutting the same power sources are applicable as for carbon- and metal-arc cutting. Oxy-arc cutting may also be performed with alternating-current welding transformers. The electrode holders used for underwater cutting must be fully insulated and must be equipped with a suitable flash-back arrestor. These safeguards are also desirable for oxy-arc torches intended for use in air only.

Carbon-arc cutting is the least expensive of the arc-cutting procedures and is used mostly in scrapyards. It is also used to some extent to remove risers and gates from nonferrous castings, and is used in yards for cutting both light and heavy sections of steel. Metal-arc cutting employing covered welding electrodes processed with waterproofing has had some application as an emergency procedure for underwater cutting. Solid-core electrodes with special coverings are used for cutting nonferrous metals in air. With the proper technique these electrodes are capable of cutting metals of any shape or geometry, the thickness to be cut being a function only of the useful length of the electrode. Oxy-arc cutting electrodes were developed primarily for use in under-water cutting and were later applied for cutting in air. In both applications they are capable of cutting both ferrous and nonferrous metals, in practically any thickness and position.

11. Glossary of Welding Terms.—This section gives definitions of many standard welding terms.

A

Air-Acetylene Welding: A gas-welding process wherein coalescence is produced by heating with a gas flame or flames obtained from the combustion of acetylene with air, without

the application of pressure and with or without the use of filler metal.

All-Weld-Metal Test Specimen: A test specimen wherein the portion being tested is composed wholly of weld metal.

Arc Cutting: A group of cutting processes wherein the severing of metals is effected by melting with the heat of an arc between an electrode and the base metal. See Carbon-Arc Cutting and Metal-Arc Cutting, also Oxy-Arc Cutting.

Arc Voltage: The voltage across the welding arc.

Arc Welding: A group of welding processes wherein coalescence is produced by heating with an electric arc or arcs, with or without the application of pressure and with or without the use of filler metal.

As-Welded: The condition of weld metal, welded joints, and weldments after welding prior to any subsequent thermal or mechanical treatment.

Atomic-Hydrogen Welding: An arc-welding process wherein coalescence is produced by heating with an electric arc maintained between two metal electrodes in an atmosphere of hydrogen. Shielding is obtained from the hydrogen. Pressure may or may not be used and filler metal may or may not be applied.

Automatic Oxygen Cutting: Oxygen cutting with equipment which performs the cutting operation without constant observation and adjustment of the controls by an operator. The equipment may or may not perform loading and unloading of the work. See Machine Oxygen Cutting.

Automatic Welding: Welding with equipment which performs the entire welding operation without constant observation and adjustment of the controls by an operator. The equipment may or may not perform the loading and unloading of the work. See Machine Welding.

Axis of a Weld: A line through the length of a weld, perpendicular to the cross section at its center of gravity. (See fig. 9.)

B

Backfire: The momentary recession of the flame into the torch tip followed by immediate reappearance or complete extinguishment of the flame.

Backhand Welding: A gas-welding technique wherein the flame is directed opposite to the progress of welding.

Backing: Material (metal, weld metal, asbestos, carbon, granular flux, etc.) backing up the joint during welding to facilitate obtaining a sound weld at the root.

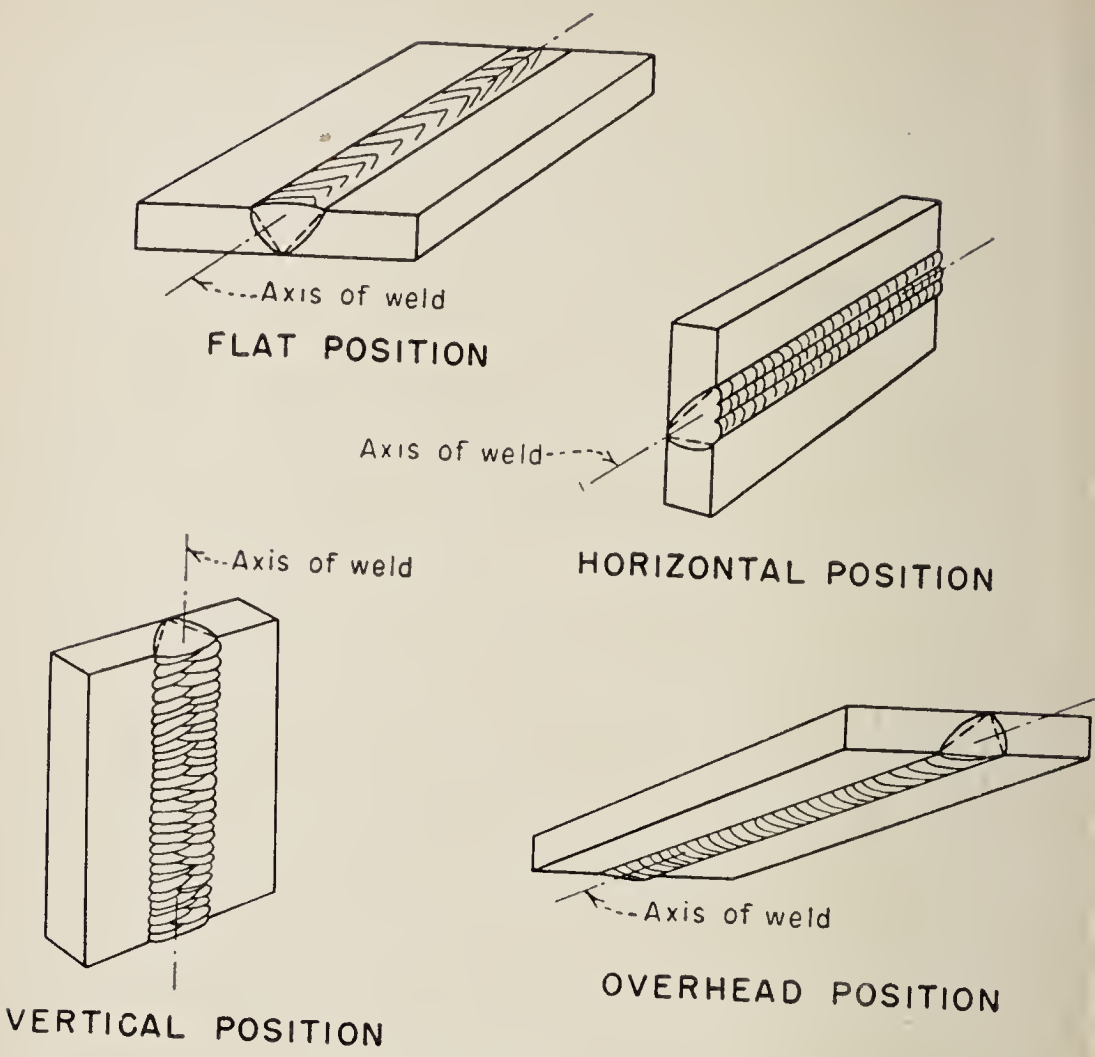

Figure 9—Welding positions.

Backing Pass: A pass made to deposit a backing weld.

Backing Ring: Backing in the form of a ring generally used in the welding of piping.

Backing Strip: Backing in the form of a strip.

Backing Weld: Backing in the form of a weld. (See fig. 10.)

Back Pass: A pass made to deposit a back weld.

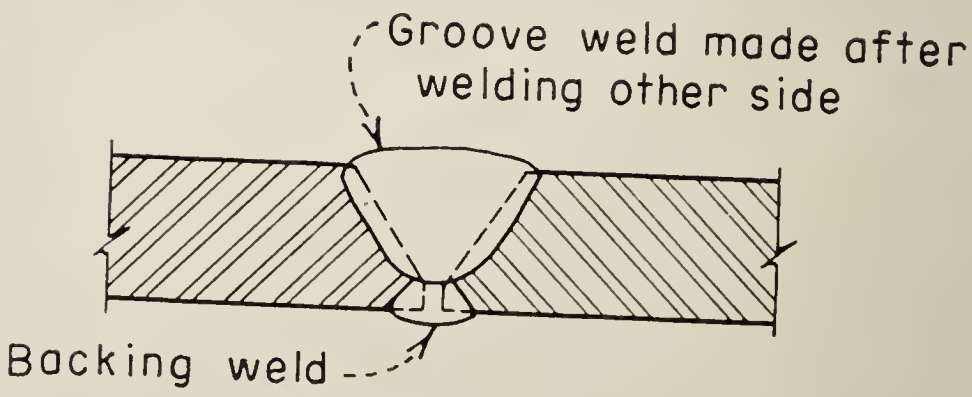

Figure 10—Backing welds.

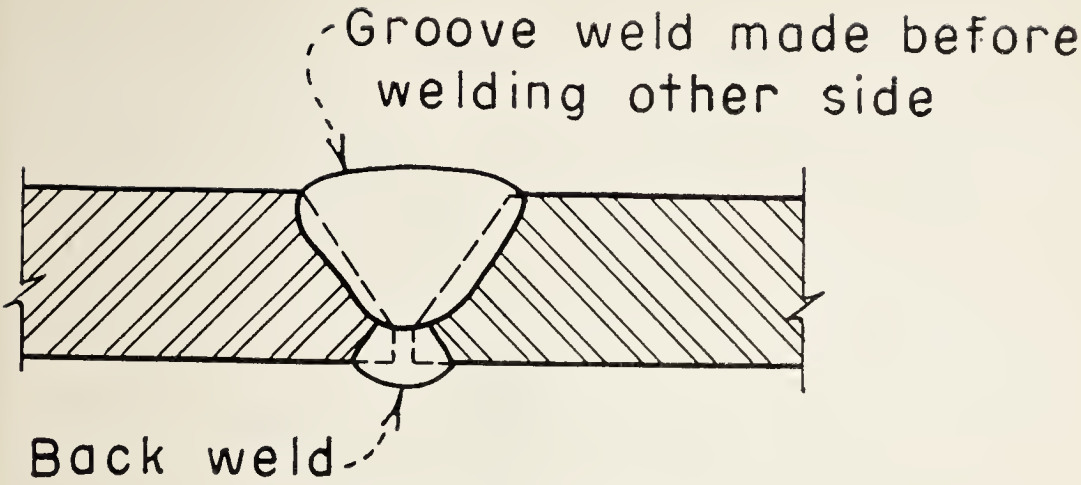

Figure 11—Back welds.

Back Weld: A weld deposited at the back of a single-groove weld. (See fig. 11.)

Backstep Sequence: A longitudinal sequence wherein the weld bead increments are deposited in the direction opposite to the progress of welding the joint. See Block Sequence, Longitudinal Sequence, etc.

Backup: In flash and upset welding, a locator, used to transmit all or a portion of the upsetting force to the work pieces.

Bare Electrode: A filler-metal electrode, used in arc welding, consisting of a metal wire with no coating other than that incidental to the drawing of the wire.

Bare-Metal-Arc Welding: An arc-welding process wherein coalescence is produced by heating with an electric arc between a bare or lightly coated metal electrode and the work, no shielding being used. Pressure is not used and filler metal is obtained from the electrode.

Base Metal: The metal to be welded or cut.

Base-Metal Test Specimen: A test specimen composed wholly of base metal.

Bead Weld: A type of weld composed of one or more string or weave beads deposited on an unbroken surface. (See fig. 12.)

Bevel: A type of edge preparation.

Bevel Angle: The angle formed between the prepared edge of a member and a plane perpendicular to the surface of the member. (See fig. 13.)

Beveling: A type of chamfering.

Block Brazing: A brazing process wherein coalescence is produced by the heat obtained from heated blocks applied to the parts to be joined, and by using a nonferrous filler metal having a melting point above 800° F. but below that of the base

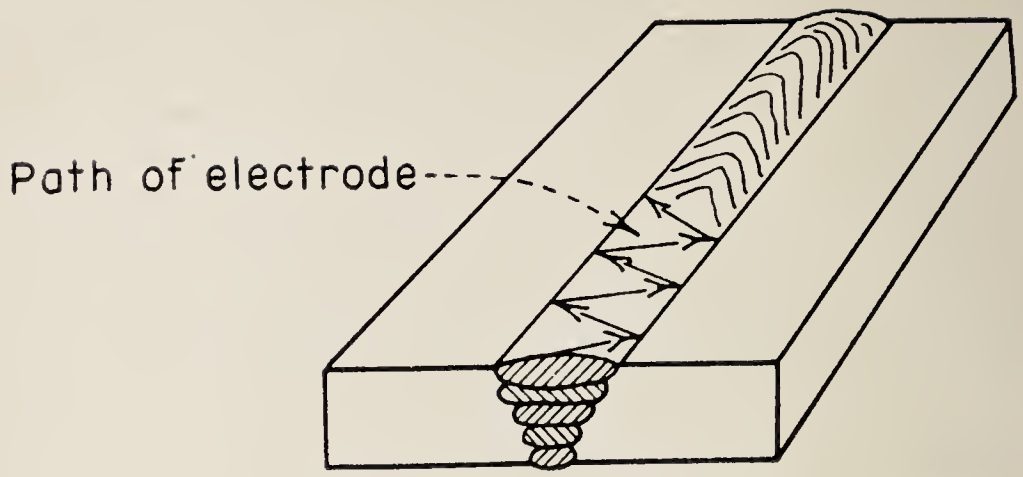

Figure 12—Weave bead.

metals. The filler metal is distributed in the joint by capillary attraction.

Block Sequence: A combined longitudinal and build-up sequence for a continuous multiple-pass weld wherein separated lengths are completely or partially built up in cross section before intervening lengths are deposited. See Backstep Sequence, Longitudinal Sequence, etc.

Bond: The junction of the weld metal and the base metal, or the junction of the base-metal parts when weld metal is not present.

Boxing: The operation of continuing a fillet weld around a corner of a member as an extension of the principal weld.

Braze Welding: A method of welding whereby a groove, fillet, plug, or slot weld is made using a nonferrous filler metal

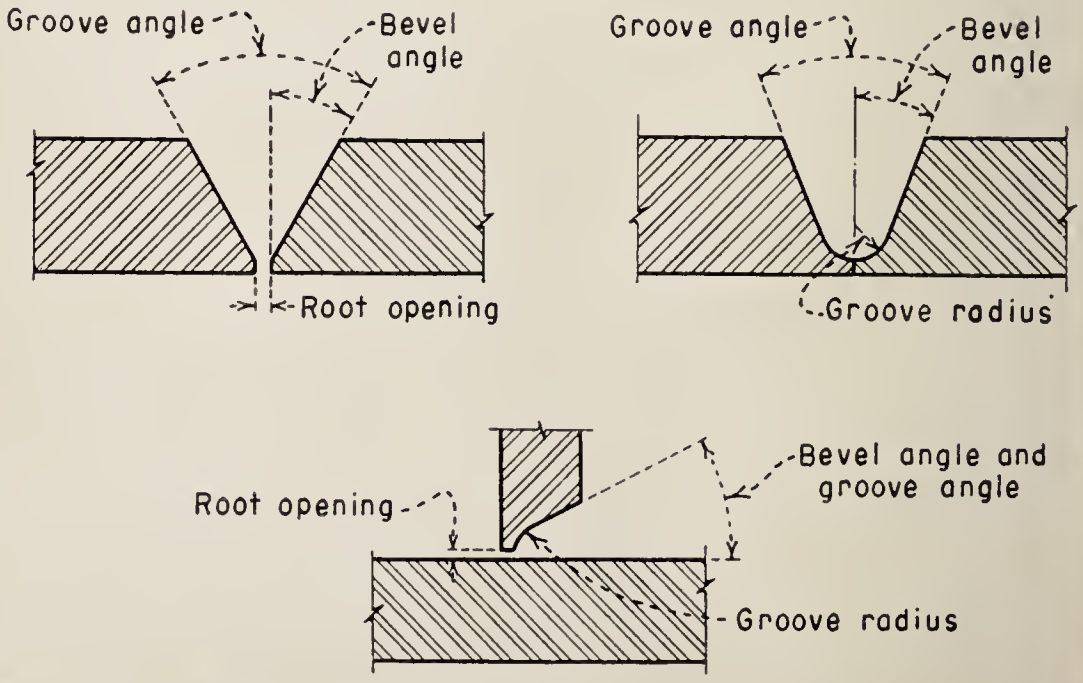

Figure 13—Bevel and groove angles, groove radius, and root openings.

having a melting point below that of the base metals but above 800° F. The filler metal is not distributed in the joint by capillary attraction.

Brazed Joint: A union of two or more members produced by the application of a brazing process.

Brazing (noun): A group of welding processes wherein coalescence is produced by heating to suitable temperatures above 800° F. and by using a nonferrous filler metal having a melting point below that of the base metals. The filler metal is distributed between the closely fitted surfaces of the joint by capillary attraction.

Build-Up Sequence: The order in which the weld beads of a multiple-pass weld are deposited with respect to the cross section of the joint. See Block Sequence, Longitudinal Sequence, etc. (See also fig. 14.)

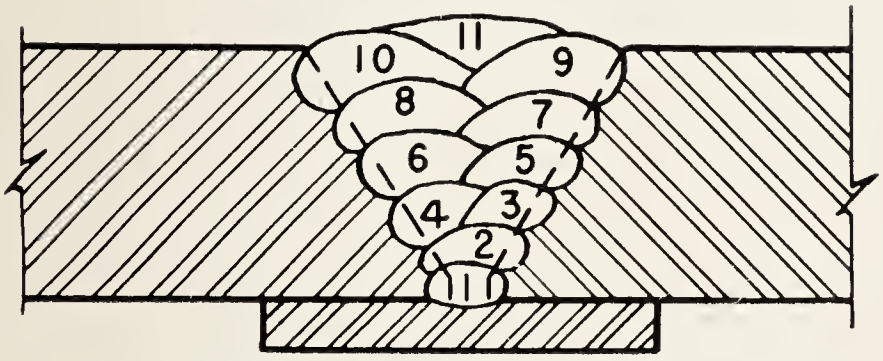

Figure 14—Build-up sequence.

Butt Joint: A joint between two members lying approximately in the same plane.

Butt Weld: A weld in a butt joint.

C

Capillary Attraction: The phenomenon by which adhesion between the molten filler metal and the base metals, together with surface tension of the molten filler metal, distributes the filler metal between the properly fitted surfaces of the joint to be brazed.

Carbon-Arc Cutting: An arc-cutting process wherein the severing of metals is effected by melting with the heat of an arc between a carbon electrode and the base metal.

Carbon-Arc Welding: An arc-welding process wherein coalescence is produced by heating with an electric arc between a carbon electrode and the work and no shielding is used. Pressure may or may not be used and filler metal may or may not be applied.

Carbon Electrode: A nonfiller-metal electrode, used in arc welding, consisting of a carbon or graphite rod.

Carbon-Electrode-Arc Welding: A group of arc-welding processes wherein carbon electrodes are used. See Shielded-Carbon-Arc Welding, Inert-Gas Carbon-Arc Welding, Carbon-Arc Welding, and Twin-Carbon-Arc Welding.

Cascade Sequence: A combined longitudinal and build-up sequence wherein weld beads are deposited in overlapping layers. (In manual shielded-metal-electrode arc welding a backstep sequence is normally used.) See Block Sequence, Build-Up Sequence, Longitudinal Sequence, etc.

Chain Intermittent Fillet Welding: Two lines of intermittent fillet welding on a joint wherein the fillet weld increments in one line are approximately opposite to those in the other line.

Chamfering: The preparation of a contour, other than for a square groove weld, on the edge of a member for welding.

Coated Electrode: See Covered Electrode and Lightly Coated Electrode.

Collar: The reinforcing metal of a non-pressure thermit weld.

Commutator-Controlled Welding: The making of a number of spot or projection welds wherein several electrodes, in simultaneous contact with the work, progressively function under the control of an electrical commutating device.

Complete Fusion: Fusion which has occurred over the entire base-metal surfaces exposed for welding.

Complete Joint Penetration: Joint penetration which extends completely through the joint.

Composite Electrode: A filler-metal electrode, used in arc welding, consisting of two or more metal components combined mechanically. It may or may not include materials which protect the molten metal from the atmosphere, improve the properties of the weld metal, or stabilize the arc.

Composite Joint: A joint wherein welding is used in conjunction with a mechanical joining process.

Concave Fillet Weld: A fillet weld having a concave face. (See fig. 15.)

Concavity: The maximum distance from the face of a concave fillet weld perpendicular to a line joining the toes. (See fig. 15.)

Concurrent Heating: The application of supplemental heat to a structure during a welding or cutting operation.

Cone: The conical part of a gas flame next to the orifice of the tip.

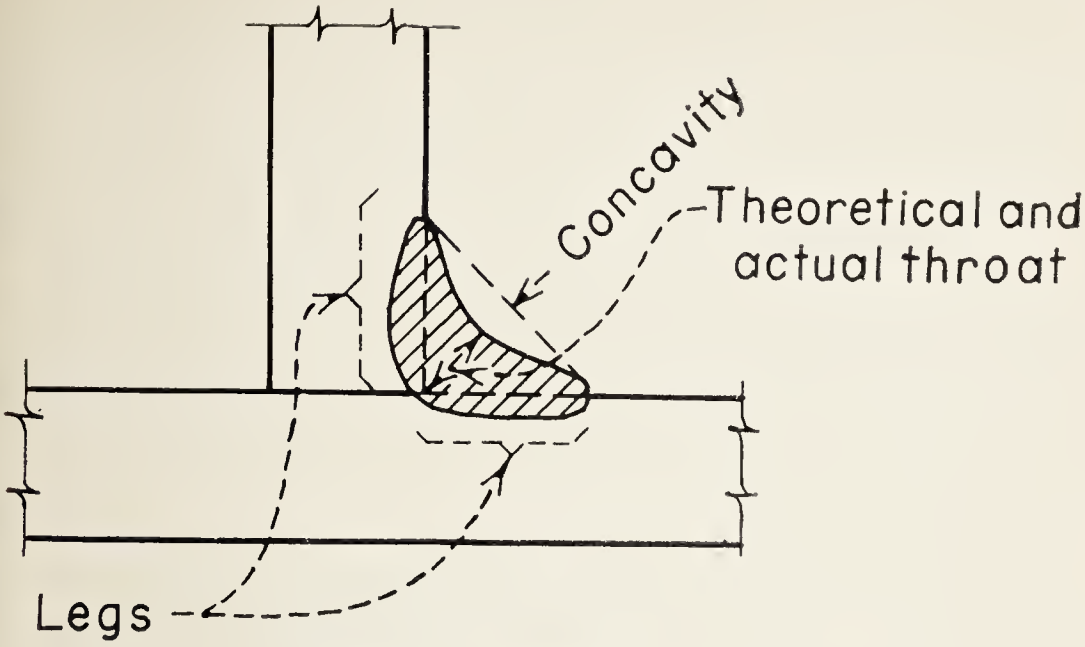

Figure 15—Concave fillet weld.

Continuous Sequence: A longitudinal sequence wherein each pass is made continuously from one end of the joint to the other. See Backstep Sequence, Longitudinal Sequence, etc.

Continuous Weld: A weld which extends without interruption for its entire length.

Convex Fillet Weld: A fillet weld having a convex face. (See fig. 16.)

Convexity: The maximum distance from the face of a convex fillet weld perpendicular to a line joining the toes. (See fig. 16.)

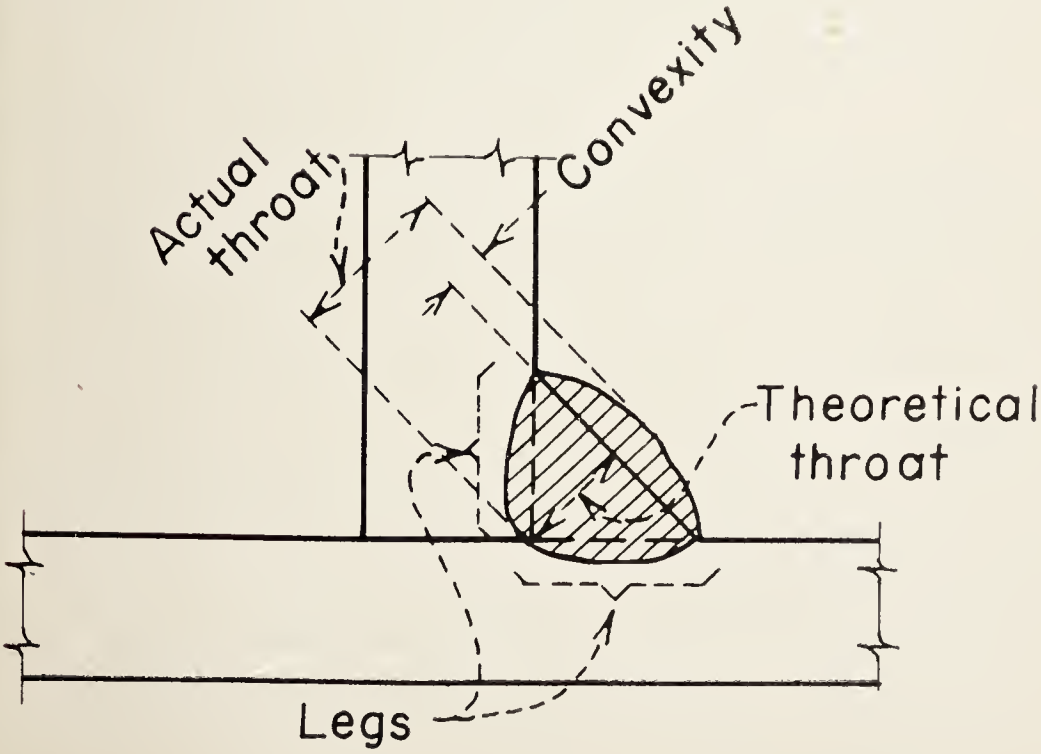

Figure 16—Convex fillet weld.

Corner Joint: A joint between two members located approximately at right angles to each other in the form of an "L."

Corona: The area sometimes surrounding the nugget of a spot weld at the faying surfaces, which provides a degree of bonding.

Cover Glass: A clear glass used in goggles, hand shields, and helmets to protect the filter glass from spattering material.

Covered Electrode: A filler-metal electrode, used in arc welding, consisting of a metal core wire with a relatively thick covering which provides protection for the molten metal from the atmosphere, improves the properties of the weld metal, and stabilizes the arc.

Crater: A depression at the termination of a weld bead.

Crater Crack: A crack in the crater of a weld bead.

Cross-Wire Weld: A projection weld made between crossed wires or bars.

Current Regulator: An automatic electrical control device for maintaining a constant current in the primary of the welding transformer.

Cutting Attachment: A device which is attached to a gas-welding torch to convert it into an oxygen-cutting torch.

Cutting Tip: That part of an oxygen-cutting torch from which the gases issue.

Cutting Torch: A device used in oxygen cutting for controlling and directing the gases used for preheating and the oxygen used for cutting the metal.

Cylinder: A portable cylindrical container used for transportation and storage of a compressed gas.

D

Deposited Metal: Filler metal that has been added during a welding operation.

Deposition Efficiency: The ratio of the weight of deposited metal to the net weight of electrodes consumed exclusive of stubs.

Deposition Rate: The weight of metal deposited in a unit of time.

Deposition Sequence: The order in which the increments of weld metal are deposited. See Longitudinal Sequence and Build-Up Sequence.

Depth of Fusion: The distance that fusion extends into the base metal from the surface melted during welding.

Die Welding: A forge-welding process wherein coalescence is produced by heating in a furnace and applying pressure by means of dies.

Dip Brazing: A brazing process wherein coalescence is produced by heating in a molten chemical or metal bath and using a nonferrous filler metal having a melting point above 800° F. but below that of the base metals. The filler metal is distributed in the joint by capillary attraction. When a metal bath is used, the bath provides the filler metal.

Downhand: See Flat Position.

Drag: The distance between the point of exit of the cutting oxygen stream and the projection, on the exit surface, of the point of entrance.

E

Edge Joint: A joint between the edges of two or more parallel or nearly parallel members.

Edge Preparation: The contour prepared on the edge of a member for welding.

Effective Length of Weld: The length of weld throughout which the correctly proportioned cross section exists.

Electrode:

Arc-Welding Electrode.—See Bare Electrode, Carbon Electrode, Composite Electrode, Covered Electrode. Lightly Coated Electrode, Metal Electrode, and Tungsten Electrode.

Resistance-Welding Electrode.—The part or parts of a resistance-welding machine through which the welding current and, in most cases, pressure are applied directly to the work. The electrode may be in the form of a rotating wheel, rotating roll, bar, cylinder, plate, clamp, chuck, or modification thereof.

Electrode Force:

Dynamic.—In spot, seam, and projection welding, the force (pounds) between the electrodes during the actual welding cycle.

Theoretical.—In spot, seam, and projection welding, the force, neglecting friction and inertia, available at the electrodes of a resistance-welding machine by virtue of the initial force application and the theoretical mechanical advantage of the system.

Static.—In spot, seam, and projection welding, the force between the electrodes under welding conditions, but with no current flowing and no movement in the welding machine.

Electrode Holder: A device used for mechanically holding the electrode and conducting current to it.

Electrode Lead: The electrical conductor between the source of arc-welding current and the electrode holder. (See figs. 17 and 18.)

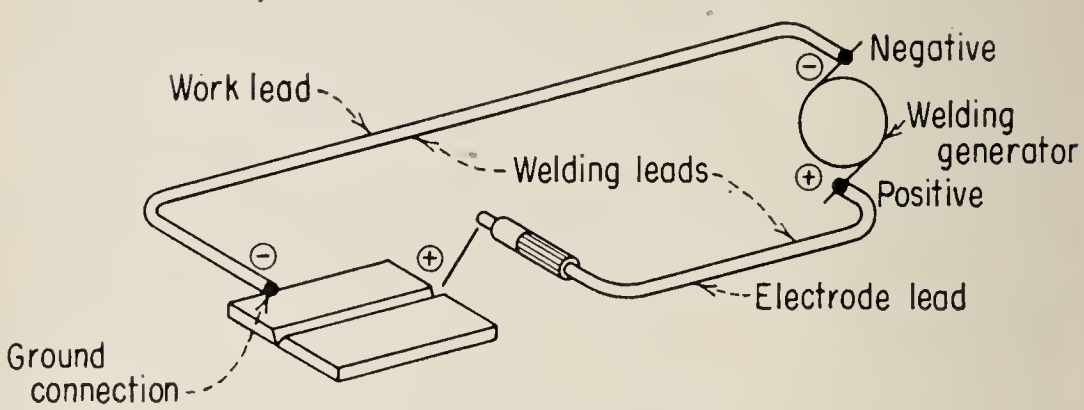

Figure 17—Reverse polarity.

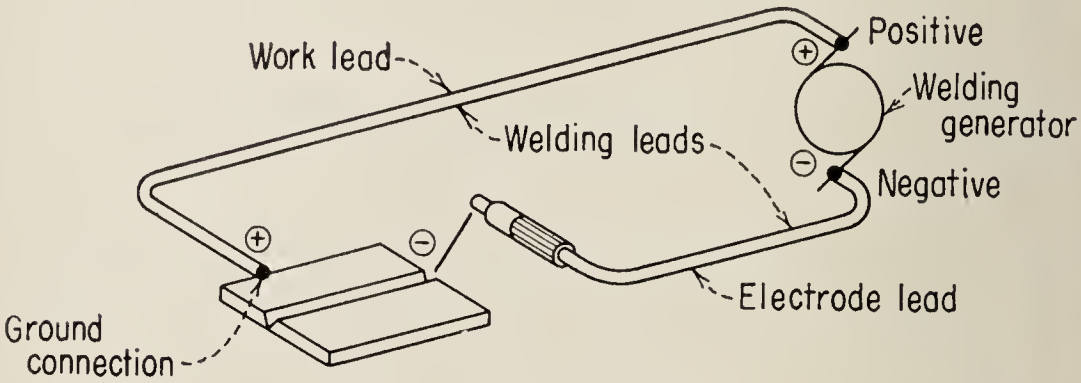

Figure 18—Straight polarity.

Electrode Skid: During spot, seam, or projection welding, the sliding of an electrode along the surface of the work.

Electronic Heat Control: A device for adjusting the heating value (r. m. s. value) of the current in making a resistance weld by controlling the ignition or firing of the tubes in an electronic contactor. The flow of current is initiated each half-cycle at an adjustable time with respect to the zero point on the voltage wave.

F

Face of Weld: The exposed surface of a weld, made by an arc- or gas-welding process, on the side from which welding was done.

Faying Surface: That surface of a member which is in contact with another member to which it is to be joined.

Filler Metal: Metal added in making a weld.

Fillet Weld: A weld of approximately triangular cross section joining two surfaces approximately at right angles to each other in a lap joint, tee joint, or corner joint. (See figs. 15 and 16.)

Filter Glass : A glass, usually colored, used in goggles, helmets, and hand shields to exclude harmful light rays.

Flame Cutting: See Oxygen Cutting.

Flame Gouging: See Oxygen Gouging.

Flash: The molten metal which is expelled, or which is squeezed out by the application of pressure, and solidifies around the weld.

Flashback: A recession of the flame into or back of the mixing chamber of the torch.

Flashing Time: In flash welding, the time during which the flashing action is taking place.

Flash Welding: A resistance-welding process wherein coalescence is produced simultaneously over the entire area of abutting surfaces, by the heat obtained from resistance to the flow of electric current between the two surfaces, and by the application of pressure after heating is substantially completed. Flashing and upsetting are accompanied by expulsion of metal from the joint.

Flat Position: The position of welding wherein welding is performed from the upper side of the joint and the face of the weld is approximately horizontal. (See fig. 9.)

Flow Brazing: A brazing process wherein coalescence is produced by heating with molten nonferrous filler metal poured over the joint until brazing temperature is attained. The filler metal has a melting point above 800° F. but below that of the base metals and is distributed in the joint by capillary attraction.

Flow Welding: A welding process wherein coalescence is produced by heating with molten filler metal, poured over the surfaces to be welded, until the welding temperature is attained and the required filler metal has been added. The filler metal is not distributed in the joint by capillary attraction.

Flux: Fusible material used in welding or oxygen cutting to dissolve and facilitate removal of oxides and other undesirable substances.

Flux-Oxygen Cutting: An oxygen-cutting process wherein severing of metals is facilitated by using a flux.

Forehand Welding: A gas-welding technique wherein the flame is directed toward the progress of welding.

Forge-Delay Time: In spot and projection welding, the time elapsed between the beginning of weld time or weld interval, and the time when the electrode force first reaches the specified pressure for forging.

Forge Welding: A group of welding processes wherein coal-

escence is produced by heating in a forge or other furnace and applying pressure or blows.

Full Fillet Weld: A fillet weld whose size is equal to the thickness of the thinner member joined.

Furnace Brazing: A brazing process wherein coalescence is produced by the heat obtained from a furnace, and by using a nonferrous filler metal having a melting point above 800° F. but below that of the base metals. The filler metal is distributed in the joint by capillary attraction.

Fusion: The melting together of filler metal and base metal, or of base metal only, which results in coalescence.

Fusion Zone: The area of base metal melted as determined on the cross section of a weld.

G

Gas Pocket: A weld cavity caused by entrapped gas.

Gas Welding: A group of welding processes wherein coalescence is produced by heating with a gas flame or flames, with or without the application of pressure and with or without the use of filler metal.

Groove: The opening provided for a groove weld.

Groove Angle: The total included angle of the groove between parts to be joined by a groove weld. (See fig. 13.)

Groove Face: That surface of a member included in the groove.

Groove Radius: The radius of a J- or U-groove. (See fig. 13.)

Groove Weld: A weld made in the groove between two members to be joined. The standard types of groove welds are shown in figure 4 and are as follows:

Square Groove Weld.
Single-Vee Groove Weld.
Single-Bevel Groove Weld.
Single-U Groove Weld.
Single-J Groove Weld.
Double-Vee Groove Weld.
Double-Bevel Groove Weld.
Double-U Groove Weld.
Double-J Groove Weld.

Ground Connection: The connection of the work lead to the work. (See figs. 17 and 18.)

H

Hammer Welding: A forge-welding process wherein coalescence is produced by heating in a forge or other furnace and applying pressure by means of hammer blows.

Hand Shield: A protective device used in arc welding for shielding the face and neck. A hand shield is equipped with a suitable filter glass and is designed to be held by hand.

Heat-Affected Zone: That portion of the base metal which has not been melted, but whose mechanical properties or microstructures have been altered by the heat of welding or cutting. (See fig. 19.)

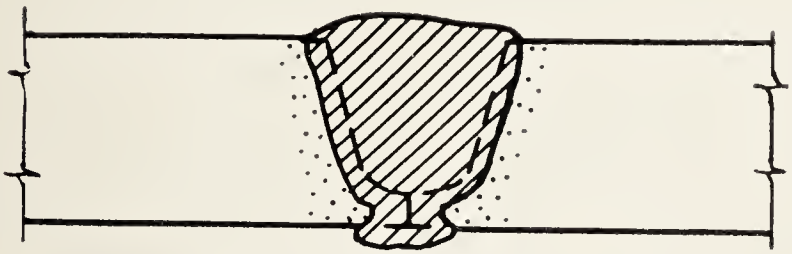

Heat-affected zone

Weld metal

815180

Figure 19—Heat-affected zone and metal area.

Heat Time: In multiple-impulse welding or seam welding, the time during which the current flows during any one impulse.

Heating Gate: The opening in a thermit mold through which the parts to be welded are preheated.

Helmet: A protective device used in arc welding for shielding the face and neck. A helmet is equipped with a suitable filter glass and is designed to be worn on the head.

Hold Time:

In spot and projection welding, the time during which force is applied at the point of welding after the last impulse of current ceases to flow.

In seam, flash, and upset welding, the time during which force is applied to the work after current ceases to flow.

Horizontal Fixed Position: In pipe welding, the position of a pipe joint wherein the axis of the pipe is approximately horizontal and the pipe is not rotated during welding.

Horizontal Position:

For a fillet weld, the position of welding wherein welding is performed on the upper side of an approximately horizontal surface and against an approximately vertical surface.

For a groove weld, the position of welding wherein the axis of the weld lies in an approximately horizontal plane

and the face of the weld lies in an approximately vertical plane.

Horizontal Rolled Position: In pipe welding, the position of a pipe joint wherein welding is performed in the flat position by rotating the pipe.

Horn: In resistance welding, a beam or arm extending from the frame of a welding machine, which transmits the electrode force and usually conducts the welding current.

Horn Spacing: In a resistance-welding machine, the unobstructed work clearance between horns or platens at right angles to the throat depth. This distance is measured with the horns parallel and horizontal at the end of the downstroke.

Hydrogen Brazing: A method of furnace brazing in a hydrogen atmosphere.

I

Impregnated-Tape Metal-Arc Welding: An arc-welding process wherein coalescence is produced by heating with an electric arc between a metal electrode and the work. Shielding is obtained from decomposition of an impregnated tape wrapped around the electrode as it is fed to the arc. Pressure is not used, and filler metal is obtained from the electrode.

Inadequate Joint Penetration: Joint penetration which is less than that specified.

Incomplete Fusion: Fusion which has occurred over less than the entire base-metal surfaces exposed for welding. (See fig. 20.)

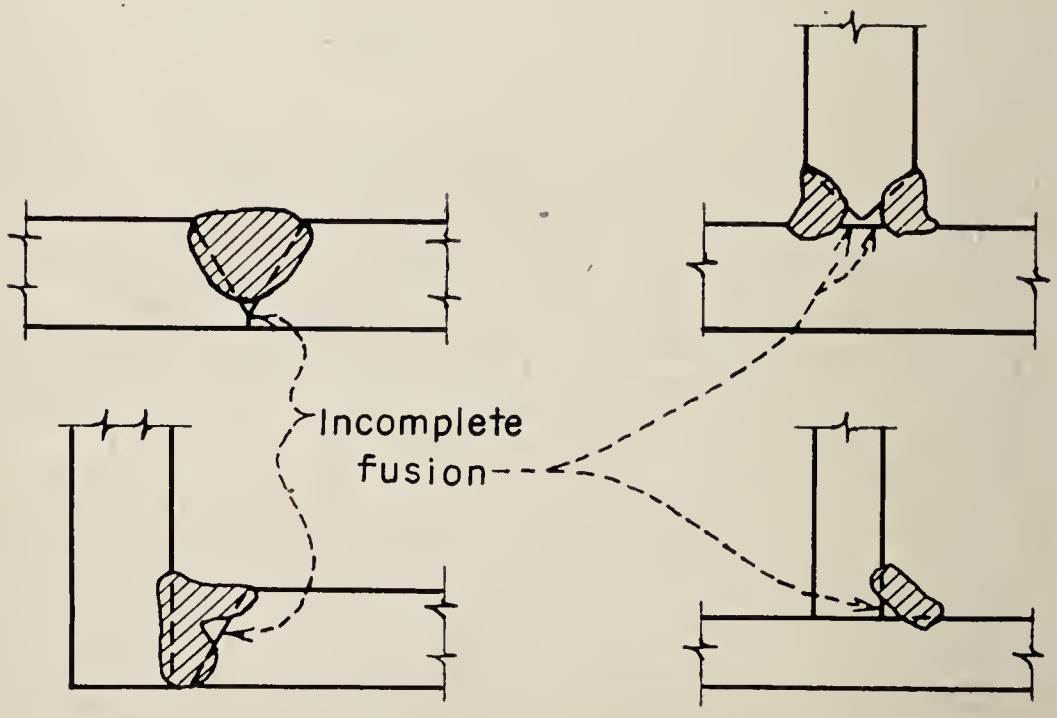

Figure 20—Incomplete fusion.

Indentation: In a spot, seam, or projection weld, the depression on the exterior surface or surfaces of the base metal.

Induction Brazing: A brazing process wherein coalescence is produced by the heat obtained from resistance of the work to the flow of induced electric current, and by using a nonferrous filler metal having a melting point above 800° F. but below that of the base metals. The filler metal is distributed in the joint by capillary attraction.

Induction Welding: A welding process wherein coalescence is produced by the heat obtained from resistance of the work to the flow of induced electric current, with or without the application of pressure.

Inert-Gas Carbon-Arc Welding: An arc-welding process wherein coalescence is produced by heating with an electric arc between a carbon electrode and the work. Shielding is obtained from an inert gas such as helium or argon. Pressure may or may not be used, and filler metal may or may not be applied.

Inert-Gas Metal-Arc Welding: An arc-welding process wherein coalescence is produced by heating with an electric arc between a metal electrode and the work. Shielding is obtained from an inert gas such as helium or argon. Pressure may or may not be used, and filler metal may or may not be applied.

Intermittent Welding: Welding wherein the continuity is broken by recurring unwelded spaces.

Interpass Temperature: In a multiple-pass weld, the lowest temperature of the deposited weld metal before the next pass is started.

J

Joint Brazing Procedure: The materials, detailed methods, and practices employed in the brazing of a particular joint.

Joint Design: The joint geometry together with the required dimensions of the welded joint.

Joint Geometry: The shape and dimensions of a joint in cross section prior to welding.

Joint Penetration: The minimum depth a groove weld extends from its face into a joint, exclusive of reinforcement.

Joint (Unwelded): The location where two or more members are to be joined by welding.

Joint Welding Procedure: The materials, detailed methods, and practices employed in the welding of a particular joint.

Joint Welding Sequence: See Build-Up Sequence.

K

Kerf: The space from which metal has been removed by a cutting process.

L

Lack of Fusion: See Incomplete Fusion.

Lap Joint: A joint between two overlapping members.

Layer: A stratum of weld metal consisting of one or more weld beads. (See fig. 21.)

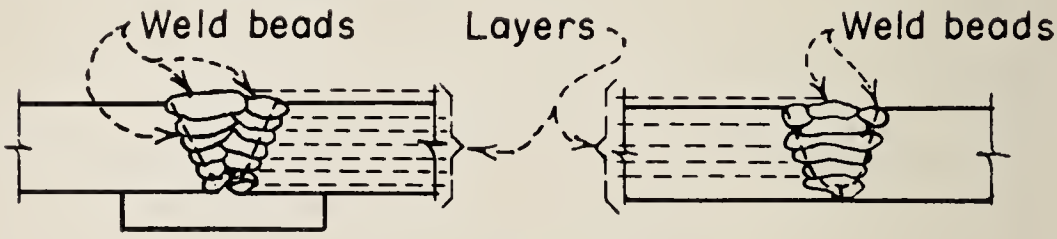

Figure 21—Weld beads and layers.

Leg of a Fillet Weld: The distance from the root of the joint to the toe of the fillet weld. (See figs. 15 and 16.)

Lightly Coated Electrode: A filler-metal electrode, used in arc welding, consisting of a metal wire with a light coating applied subsequent to the drawing operation, primarily for stabilizing the arc.

Local Preheating: Preheating a specific portion of a structure.

Local Stress-Relief Heat Treatment: Stress-relief heat treatment of a specific portion of a structure.

Locked-Up Stress: See Residual Stress.

Longitudinal Seam Welding: The making of a seam weld in a direction essentially parallel to the throat depth of a resistance-welding machine.

Longitudinal Sequence: The order in which the increments of a continuous weld are deposited with respect to its length. See Backstep Sequence, Block Sequence, etc.

M

Machine Oxygen Cutting: Oxygen cutting with equipment which performs the cutting operation under the constant observation and control of an operator. The equipment may or may not perform the loading and unloading of the work. See Automatic Oxygen Cutting.

Machine Welding: Welding with equipment which performs the welding operation under the observation and control of an

operator. The equipment may or may not perform the loading and unloading of the work. See Automatic Welding.

Manifold: A multiple header for connecting several cylinders to one or more torch supply lines.

Manual Oxygen Cutting: Oxygen cutting wherein the entire cutting operation is performed and controlled by hand.

Manual Welding: Welding wherein the entire welding operation is performed and controlled by hand.

Mash Seam Weld: A seam weld made in a lap joint wherein the thickness at the lap is reduced plastically to approximately the thickness of one of the lapped parts.

Melting Rate: The weight or length of electrode melted in a unit of time.

Metal-Arc Cutting: An arc-cutting process wherein the severing of metals is effected by melting with the heat of an arc between a metal electrode and the base metal.

Metal-Arc Welding: See Shielded-Metal-Arc Welding, Impregnated-Tape Metal-Arc Welding, Submerged-Arc Welding, Atomic-Hydrogen Welding, Bare-Metal-Arc Welding, Inert-Gas Metal-Arc Welding, Stud Welding, and Shielded Stud Welding.

Metal Electrode: A filler- or nonfiller-metal electrode, used in arc welding, consisting of a metal wire with or without a covering or coating.

Metal-Electrode-Arc Welding: A group of arc-welding processes wherein metal electrodes are used. See Shielded-Metal-Arc Welding, Impregnated-Tape Metal-Arc Welding, Atomic-Hydrogen Welding, Inert-Gas Metal-Arc Welding, Submerged-Arc Welding, Shielded Stud Welding, Stud Welding, and Bare-Metal-Arc Welding.

Mixing Chamber: That part of a gas-welding or oxygen-cutting torch wherein the gases are mixed.

Multiple-Impulse Welding: The making of spot, projection, and upset welds by more than one impulse of current. When alternating current is used, each impulse may consist of a fraction of a cycle or a number of cycles.

Multiple-Impulse Weld Timer: In resistance welding, a device for multiple-impulse welding which controls only the heat time, the cool time, and either the weld interval or the number of heat times.

N

Neutral Flame: A gas flame wherein the portion used is neither oxidizing nor reducing.

Nonpressure Thermit Welding: A thermit-welding process wherein coalescence is produced by heating with superheated

liquid metal resulting from the chemical reaction between a metal oxide and aluminum, without the application of pressure. Filler metal is obtained from the liquid metal.

Nonsynchronous Initiation: In resistance welding, the initiation or termination of the welding transformer primary current at any random time with respect to the voltage wave.

Nugget: The weld metal joining the parts in spot, seam, or projection welds.

O

Off Time: In resistance welding, the time during which the electrodes are off the work. This term is generally applied where the welding cycle is repetitive.

Open-Circuit Voltage: In arc welding, the voltage between the terminals of a power source when no current is flowing in the circuit.

Overhead Position: The position of welding wherein welding is performed from the underside of the joint. (See fig. 9.)

Overlap: Protrusion of weld metal beyond the bond at the toe of the weld. (See fig. 22.)

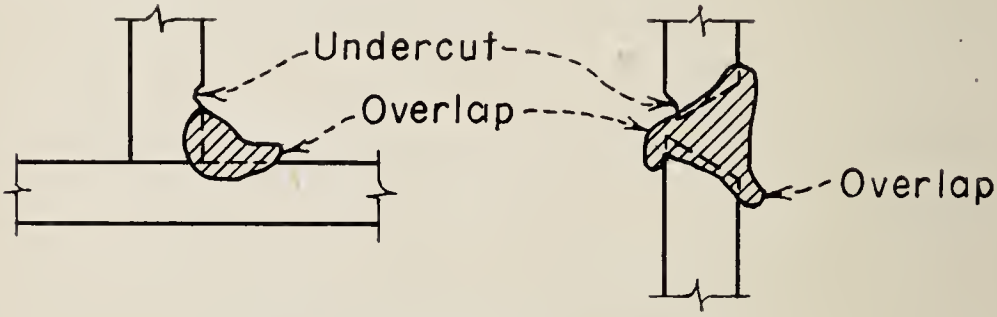

Figure 22—Undercut and overlap.

Oxidizing Flame: A gas flame wherein the portion used has an oxidizing effect.

Oxy-Acetylene Cutting: An oxygen-cutting process wherein the severing of metals is effected by means of the chemical reaction of oxygen with the base metal at elevated temperatures, the necessary temperature being maintained by means of gas flames obtained from the combustion of acetylene with oxygen.

Oxy-Acetylene Welding: A gas-welding process wherein coalescence is produced by heating with a gas flame or flames obtained from the combustion of acetylene with oxygen, with or without the application of pressure, and with or without the use of filler metal.

Oxy-Arc Cutting: An oxygen-cutting process wherein the severing of metals is effected by means of the chemical reac-

tion of oxygen with the base metal at elevated temperatures, the necessary temperature being maintained by means of an arc between an electrode and the base metal.

Oxy-City-Gas Cutting: An oxygen-cutting process wherein the severing of metals is effected by means of the chemical reaction of oxygen with the base metal at elevated temperatures, the necessary temperature being maintained by means of gas flames obtained from the combustion of city gas with oxygen.

Oxy-Hydrogen Cutting: An oxygen-cutting process wherein the severing of metals is effected by means of the chemical reaction of oxygen with the base metal at elevated temperatures, the necessary temperature being maintained by means of gas flames obtained from the combustion of hydrogen with oxygen.

Oxy-Hydrogen Welding: A gas-welding process wherein coalescence is produced by heating with a gas flame or flames obtained from the combustion of hydrogen with oxygen, without the application of pressure and with or without the use of filler metal.

Oxy-Natural-Gas Cutting: An oxygen-cutting process wherein the severing of metals is effected by means of the chemical reaction of oxygen with the base metal at elevated temperatures, the necessary temperature being maintained by means of gas flames obtained from the combustion of natural gas with oxygen.

Oxy-Propane Cutting: An oxygen-cutting process wherein the severing of metals is effected by means of the chemical reaction of oxygen with the base metal at elevated temperatures, the necessary temperature being maintained by means of gas flames obtained from the combustion of propane with oxygen.

Oxygen Cutter: One who is capable of performing a manual oxygen-cutting operation.

Oxygen Cutting: A group of cutting processes wherein the severing of metals is effected by means of the chemical reaction of oxygen with the base metal at elevated temperatures. In the case of oxidation-resistant metals the reaction is facilitated by use of a flux.

Oxygen-Cutting Operator: One who operates machine or automatic oxygen-cutting equipment.

Oxygen Gouging: An application of oxygen cutting wherein a chamfer or groove is formed.

Oxygen Lance: A length of pipe used to convey oxygen to the point of cutting in oxygen-lance cutting.

Oxygen-Lance Cutting: An oxygen-cutting process wherein only oxygen is supplied by the lance and the preheat is obtained by other means.

244795—53——4

P

Parent Metal: See Base Metal.

Partial Joint Penetration: Joint penetration which is less than complete.

Pass: A single longitudinal progression of a welding operation along a joint or weld deposit. The result of a pass is a weld bead.

Peening: The mechanical working of metals by means of hammer blows.

Penetration: See Joint Penetration and Root Penetration.

Percussion Welding: A resistance-welding process wherein coalescence is produced simultaneously over the entire area of abutting surfaces by the heat obtained from an arc caused by a rapid discharge of stored electrical energy, with pressure percussively applied during or immediately following the electrical discharge.

Platen: In a resistance-welding machine, a member with a substantially flat surface to which dies, fixtures, backups, or electrode holders are attached, and which transmits the electrode force or upsetting force.

Platen Force: In flash and upset welding, the force available at the movable platen to cause upsetting. This force may be dynamic, theoretical, or static.

Plug Weld: A circular weld made by either arc or gas welding through one member of a lap or tee joint joining that member to the other. The weld may or may not be made through a hole in the first member. If a hole is used, the walls may or may not be parallel and the hole may be partially or completely filled with weld metal.

Porosity: Gas pockets or voids in metal.

Positioned Weld: A weld made in a joint which has been so placed as to facilitate making the weld.

Position of Welding: See Flat, Horizontal, Vertical, and Overhead Positions; and Horizontal Rolled, Horizontal Fixed, and Vertical Pipe Positions.

Post Heating: The application of heat to a weld or weldment subsequent to a welding or cutting operation.

Postweld Interval: In resistance welding, the heat time elapsed between the end of weld time or weld interval, and the start of hold time. During this period the weld is subjected to mechanical and heat treatment.

Preheating: The application of heat to the base metal prior to a welding or cutting operation.

Pressure-Controlled Welding: The making of a number of spot or projection welds wherein several electrodes progressively function under the control of a pressure-sequencing device.

Pressure Gas Welding: A gas-welding process wherein coalescence is produced simultaneously over the entire area of abutting surfaces by heating with gas flames obtained from the combustion of a fuel gas with oxygen and by the application of pressure, without the use of filler metal.

Pressure Thermit Welding: A thermit-welding process wherein coalescence is produced by heating with superheated liquid metal and slag resulting from the chemical reaction between iron oxide and aluminum, and by applying pressure. The liquid metal from the reaction is not used as filler metal.

Pressure Welding: Any welding process or method wherein pressure is used to complete the weld.

Preweld Interval: In spot, projection, and upset welding, the time between the end of squeeze time and the start of weld time or weld interval, during which the material is preheated In flash welding, the time during which the material is preheated.

Progressive Block Sequence: A block sequence wherein successive blocks are completed progressively along the joint, either from one end to the other or from the center of the joint toward either end.

Projection Welding: A resistance-welding process wherein coalescence is produced by the heat obtained from resistance to the flow of electric current through the work parts held together under pressure by electrodes. The resulting welds are localized at predetermined points by the design of the parts to be welded. The localization is usually accomplished by projections, embossments, or intersections.

Push Welding: The making of a spot or projection weld wherein the force is applied manually to one electrode, and the work or a backing bar takes the place of the other electrode.

Q

Quench Time: In resistance welding, that part of the post-weld interval from the cessation of flow of welding current to the application of a current impulse for post heating.

R

Rate of Flame Propagation: The speed at which a flame travels through a mixture of gases.

Reaction Stress: The residual stress which could not otherwise exist if the members or parts being welded were isolated as free bodies without connection to other parts of the structure.

Reactor: A device used in arc-welding circuits for the purpose of minimizing irregularities in the flow of welding current.

Reducing Flame: A gas flame wherein the portion used has a reducing effect.

Regulator: A device for controlling the delivery of gas at some substantially constant pressure regardless of variation in the higher pressure at the source.

Reinforcement of Weld: Weld metal on the face of a groove weld in excess of the metal necessary for the specified weld size. (See fig. 23.)

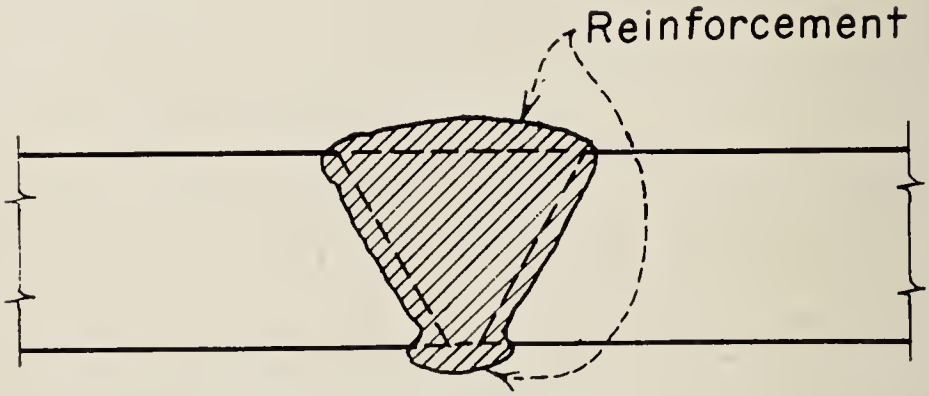

Figure 23—Reinforcement.

Residual Stress: Stress remaining in a structure or member as a result of thermal or mechanical treatment or both.

Resistance Brazing: A brazing process wherein coalescence is produced by the heat obtained from resistance to the flow of electric current in a circuit of which the work is a part, and by using a nonferrous filler metal having a melting point above 800° F. but below that of the base metals. The filler metal is distributed in the joint by capillary attraction.

Resistance Welding: A group of welding processes wherein coalescence is produced by the heat obtained from resistance of the work to the flow of electric current in a circuit of which the work is a part, and by the application of pressure.

Reverse Polarity: The arrangement of direct-current arc-welding leads wherein the work is the negative pole and the electrode is the positive pole of the welding arc. (See fig. 17.)

Roll Spot Welding: The making of separated spot welds with circular electrodes.

Roll Welding: A forge-welding process wherein coalescence is produced by heating in a furnace and applying pressure by means of rolls.

Root: See Root of Joint and Root of Weld.

Root Crack: A crack in the weld or base metal occurring at the root of a weld.

Root Face: That portion of the groove face adjacent to the root of the joint.

Root Gap: See Root Opening.

Root of Joint: That portion of a joint to be welded where the members approach closest to each other. In cross section the root of the joint may be either a point, a line, or an area.

Root of Weld: The points, as shown in cross section, at which the bottom of the weld intersects the base-metal surfaces. (See fig. 24.)

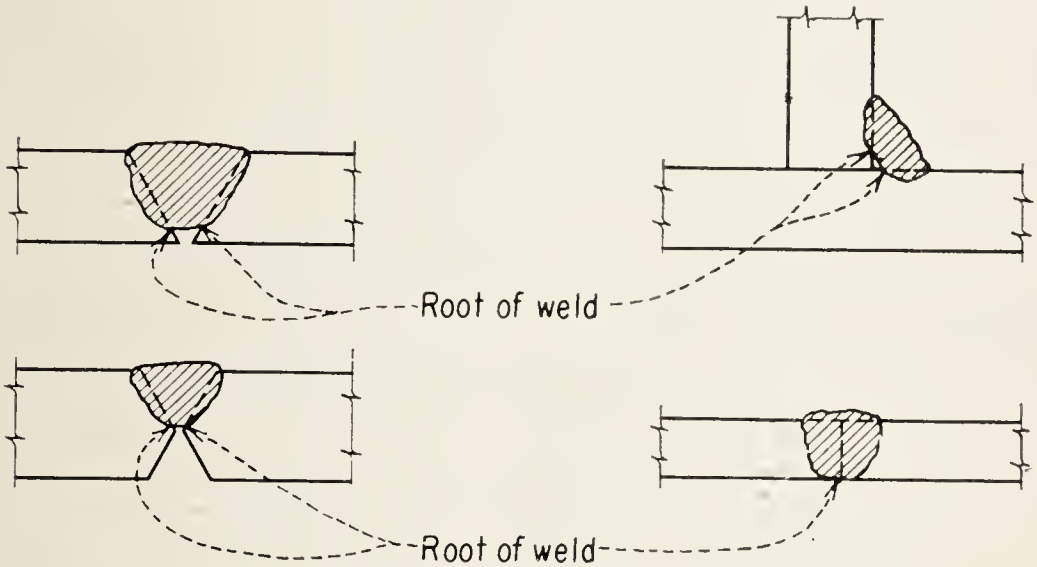

Figure 24—Root of weld.

Root Opening: The separation between the members to be joined, at the root of the joint. (See fig. 13.)

Root Penetration: The depth a groove weld extends into the root of a joint measured on the centerline of the root cross section. (See fig. 25.)

S

Scarfing: See Chamfering.

Seal Weld: Any weld used primarily to obtain tightness.

Seam Weld: A weld consisting of a series of overlapping spot welds, made by seam welding or spot welding.

Seam-Weld Timer: In seam welding, a device which controls the heat times and the cool times.

Seam Welding: A resistance-welding process wherein coalescence is produced by the heat obtained from resistance to the flow of electric current through the work parts held together under pressure by circular electrodes. The resulting

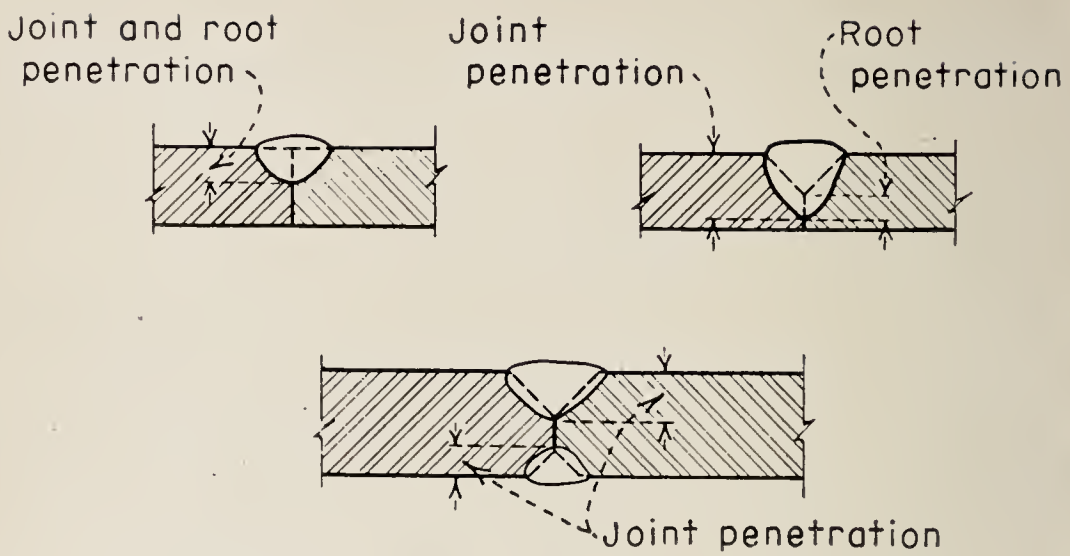

Figure 25—Root and joint penetration of groove welds.

weld is a series of overlapping spot welds made progressively along a joint by rotating the electrodes.

Selective Block Sequence: A block sequence wherein successive blocks are completed in an order selected to create a predetermined stress pattern.

Semi-Automatic Arc Welding: Arc welding with equipment which controls only the filler-metal feed. The advance of the welding is manually controlled.

Series Welding: The making of two spot or seam welds or two or more projection welds simultaneously with three electrodes forming a series circuit.

Sequence Timer: In resistance welding, a device for controlling the sequence and duration of any or all of the elements of a complete welding cycle, except weld time or heat time.

Sequence Weld Timer: In resistance welding, a device for controlling the sequence and duration of any or all of the elements of a complete welding cycle.

Sheet Separation: In spot, seam, and projection welding, the gap surrounding the weld between faying surfaces after the joint has been welded.

Shielded-Carbon-Arc Welding: An arc-welding process wherein coalescence is produced by heating with an electric arc between a carbon electrode and the work. Shielding is obtained from the combustion of a solid material fed into the arc or from a blanket of flux on the work, or from both. Pressure may or may not be used, and filler metal may or may not be applied.

Shielded-Metal-Arc Welding: An arc-welding process wherein coalescence is produced by heating with an electric arc between a covered metal electrode and the work. Shield-

ing is obtained from decomposition of the electrode covering. Pressure is not used, and filler metal is obtained from the electrode.

Shielded Stud Welding: An arc-welding process wherein coalescence is produced by heating with an electric arc drawn between a metal stud, or similar part, and the other work part until the surfaces to be joined are properly heated, when they are brought together under pressure. Shielding is obtained from an inert gas such as helium or argon.

Shoulder: See Root Face.

Shrinkage Stress: See Residual Stress.

Single-Impulse Welding: The making of spot, projection, and upset welds by a single impulse of current. When alternating current is used, an impulse may consist of a fraction of a cycle or a number of cycles.

Size of Fillet Weld:

For equal leg fillet welds, the leg length of the largest isosceles right triangle which can be inscribed within the fillet-weld cross section. (See fig. 26.)

For unequal leg fillet welds, the leg lengths of the largest right triangle which can be inscribed within the fillet-weld cross section. (See fig. 26.)

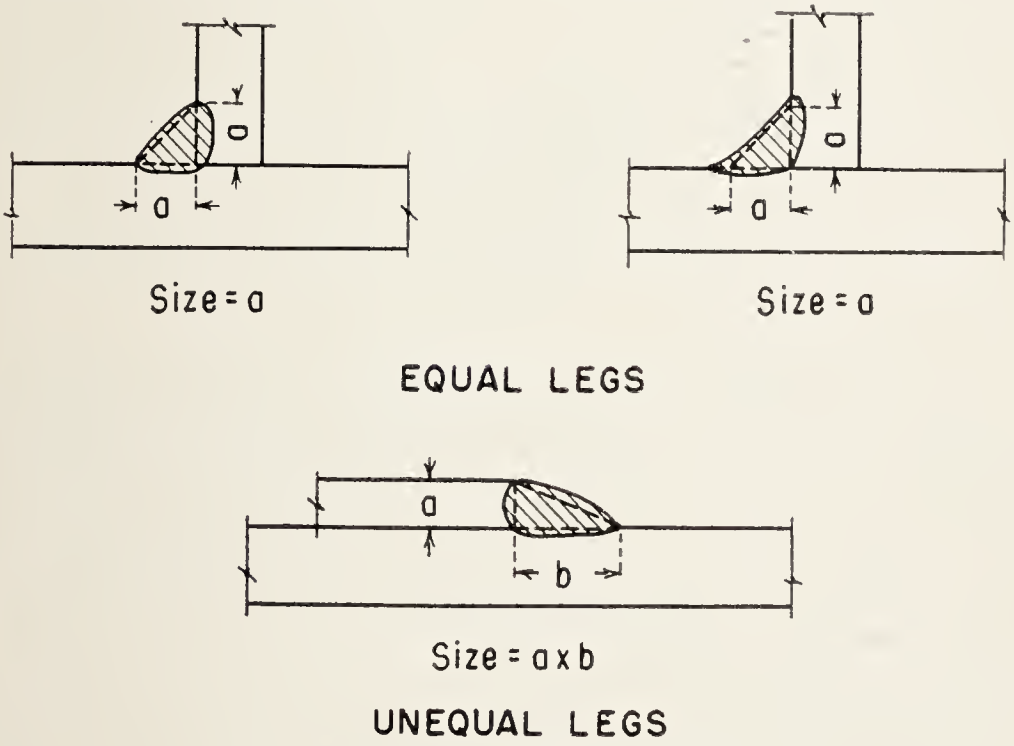

Figure 26—Size of fillet welds.

Size of Groove Weld: The joint penetration (depth of chamfering plus the root penetration when specified). (See fig. 27.)

Slag Inclusion: Nonmetallic solid material entrapped in weld metal or between weld metal and base metal.

Slot Weld: A weld made in an elongated hole in one member of a lap or tee joint joining that member to that portion of the surface of the other member which is exposed through the hole. The hole may be open at one end and may be partially or completely filled with weld metal.

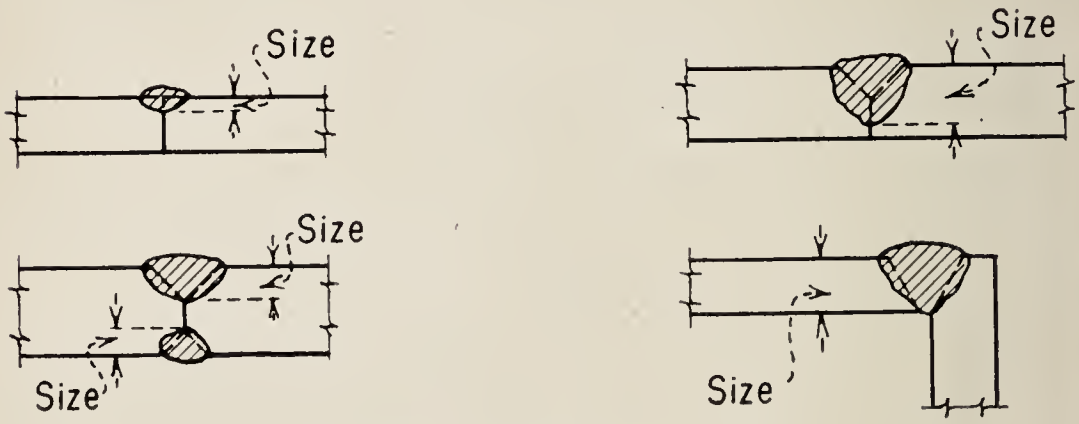

Figure 27—Size of groove welds.

Slugging: The act of adding a separate piece or pieces of material in a joint before or during welding, resulting in a welded joint which does not comply with design, drawing, or specification requirements.

Spacer Strip: A metal strip or bar inserted in the root of a joint prepared for a groove weld to serve as a backing and to maintain root opening during welding.

Spatter: In arc and gas welding, the metal particles expelled during welding and which do not form a part of the weld.

Spatter Loss: Metal lost by spatter.

Spot Welding: A resistance-welding process wherein coalescence is produced by the heat obtained from resistance to the flow of electric current through the work parts held together under pressure by electrodes. The size and shape of the individually formed welds are limited primarily by the size and contour of the electrodes.

Square Groove Weld: A type of groove weld. (See fig. 4, sheet 1.)

Squeeze Time: In spot, seam projection, and upset welding, the time interval between the initial application of the electrode force on the work and the first application of current.

Stack Cutting: Oxygen cutting of stacked metal plates arranged so that all the plates are severed by a single cut.

Staggered Intermittent Fillet Welding: Two lines of intermittent fillet welding on a joint wherein the fillet-weld increments in one line are staggered with respect to those in the other line.

Stored-Energy Welding: The making of a weld with electrical energy accumulated electrostatically, electromagnetically, or electrochemically at a relatively low rate and made available at the required welding rate.

Straight Polarity: The arrangement of direct-current arc-welding leads wherein the work is the positive pole and the electrode is the negative pole of the welding arc. (See fig. 18.)

Stress-Relief Heat Treatment: Uniform heating of a structure or portion thereof to a sufficient temperature, below the critical range, to relieve the major portion of the residual stresses, followed by uniform cooling. (NOTE.—Terms normalizing, annealing, etc., are misnomers for this application.)

Stringer Bead: A type of weld bead made without appreciable transverse oscillation. (See fig. 28.)

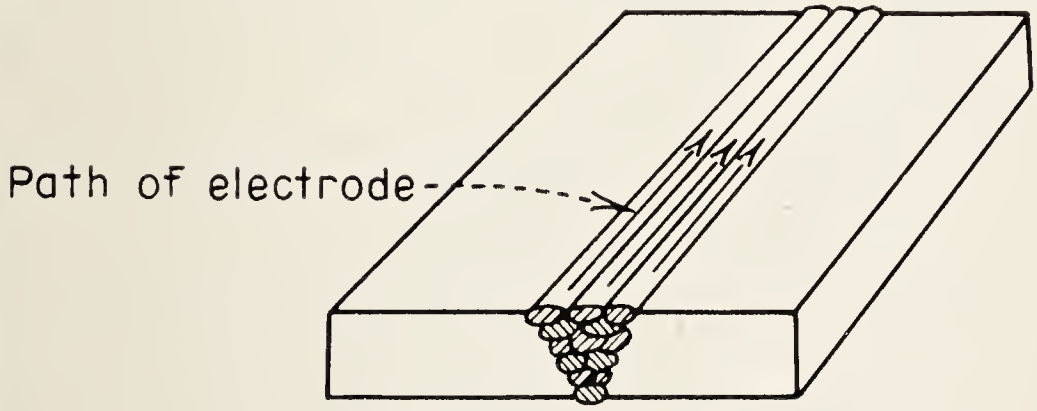

Figure 28—Stringer bead.

Stringer Beading: The deposition of stringer beads.

Stud Welding: An arc-welding process wherein coalescence is produced by heating with an electric arc drawn between a metal stud, or similar part, and the other work part until the surfaces to be joined are properly heated, when they are brought together under pressure. No shielding is used.

Submerged-Arc Welding: An arc-welding process wherein coalescence is produced by heating with an electric arc or arcs between a bare-metal electrode or electrodes and the work. The welding is shielded by a blanket of granular, fusible material on the work. Pressure is not used, and filler metal is obtained from the electrode or from a supplementary welding rod.

Surfacing: The deposition of filler metal on a metal surface to obtain desired properties or dimensions.

Synchronous Initiation: In spot, seam, and projection welding, the initiation and termination of each half-cycle of welding-transformer primary current so that all half-cycles of such current are identical.

T

Tack Weld: A weld made to hold parts of a weldment in proper alignment until the final welds are made.

Tee Joint: A joint between two members located approximately at right angles to each other in the form of a "T."

Temper Time: In resistance welding, that part of the post-weld interval during which a current suitable for tempering or heat treatment flows. The current can be single or multiple impulse, with varying heat and cool intervals.

Thermit Crucible: The vessel in which the thermit reaction takes place.

Thermit Mixture: A mixture of metal oxide and finely divided aluminum with the addition of alloying metals as required.

Thermit Mold: A mold formed around the parts to be welded to receive the molten metal.

Thermit Reaction: The chemical reaction between metal oxide and aluminum which produces superheated molten metal and aluminum oxide slag.

Thermit Welding: A group of welding processes wherein coalescence is produced by heating with superheated liquid metal and slag resulting from a chemical reaction between a metal oxide and aluminum, with or without the application of pressure. Filler metal, when used, is obtained from the liquid metal.

Throat Depth: In a resistance-welding machine, the distance from the centerline of the electrodes or platens to the nearest point of interference for flatwork or sheets. In the case of a seam-welding machine with a universal head, the throat depth is measured with the machine arranged for transverse welding.

Throat of a Fillet Weld:

Theoretical.—The distance from the beginning of the root of the joint perpendicular to the hypotenuse of the largest right triangle that can be inscribed within the fillet-weld cross section. (See figs. 15 and 16.)

Actual.—The shortest distance from the root of a fillet weld to its face. (See figs. 15 and 16.)

Throat Opening: See Horn Spacing.

Toe Crack: A crack in the base metal occurring at the toe of a weld. (See fig. 29.)

Toe of Weld: The junction between the face of a weld and the base metal. (See figs. 30 and 31.)

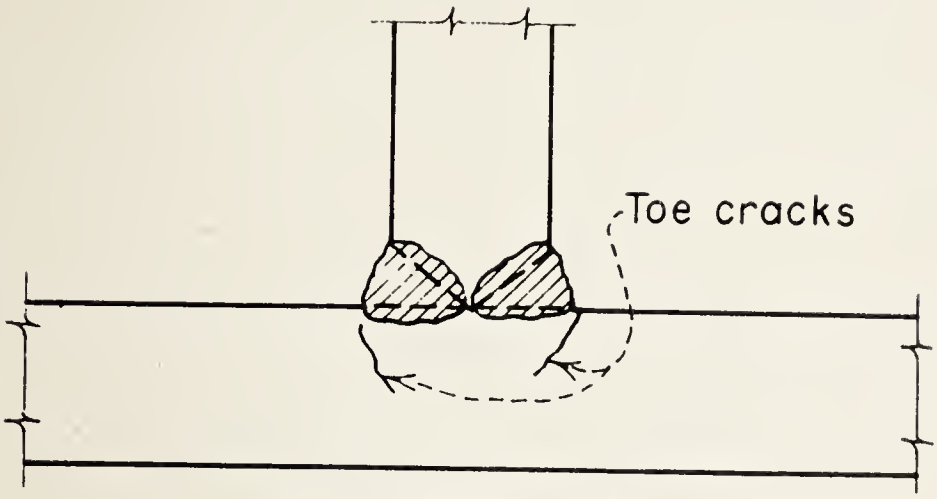

Figure 29—Toe cracks.

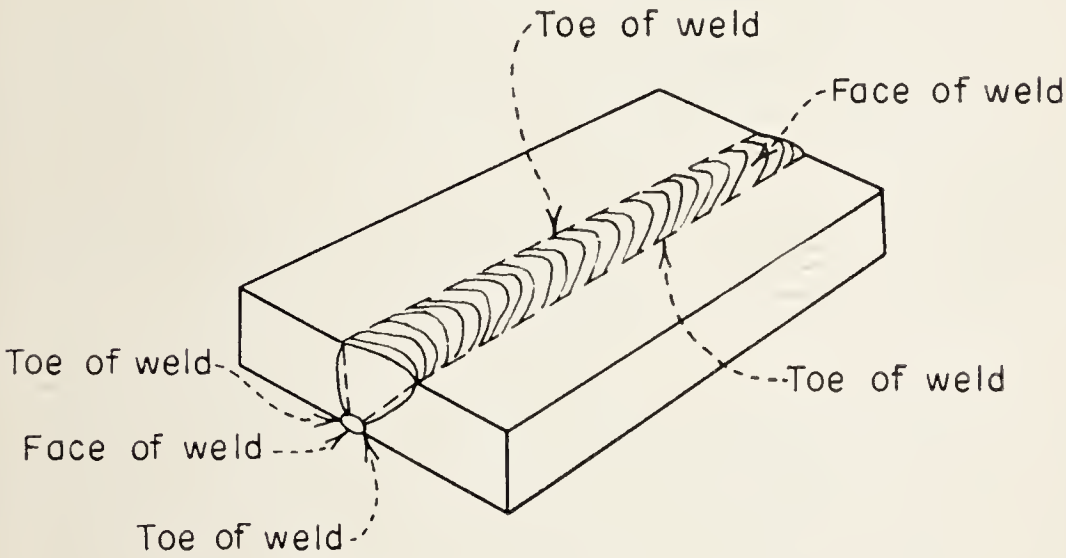

Figure 30—Groove weld.

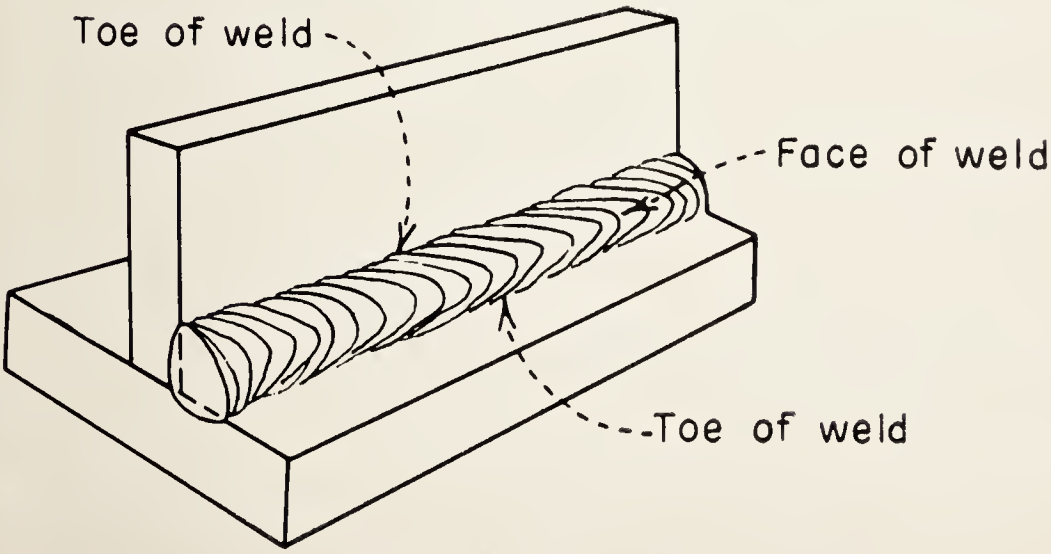

Figure 31—Fillet weld.

Torch: See Welding Torch or Cutting Torch.

Torch Brazing: A brazing process wherein coalescence is produced by heating with a gas flame and by using a nonferrous filler metal having a melting point above 800° F. but below that of the base metal. The filler metal is distributed in the joint by capillary attraction.

Transverse Seam Welding: The making of a seam weld in a direction essentially at right angles to the throat depth of a seam welding machine.

Tungsten Electrode: A nonfiller-metal electrode used in arc welding, consisting of a tungsten wire.

Twin-Carbon-Arc Brazing: A brazing process wherein coalescense is produced by heating with an electric arc maintained between two carbon electrodes, and by using a nonferrous filler metal having a melting point above 80° F. but below that of the base metals. The filler metal is distributed in the joint by capillary attraction.

Twin-Carbon-Arc Welding: An arc-welding process wherein coalescence is produced by heating with an electric arc maintained between two carbon electrodes, no shielding being used. Pressure is not used, and filler metal may or may not be applied.

Underbead Crack: A crack in the heat-affected zone not extending to the surface of the base metal.

U

Undercut: A groove melted into the base metal adjacent to the toe of a weld and left unfilled by weld metal. (See fig. 22.)

Upset: The localized increase in volume in the region of a weld, resulting from the application of pressure.

Upset Welding: A resistance-welding process wherein coalescence is produced simultaneously over the entire area of abutting surfaces or progressively along a joint, by the heat obtained from resistance to the flow of electric current through the area of contact of those surfaces. Pressure is applied before heating is started and is maintained throughout the heating period.

Upsetting Force: In flash and upset welding, the force exerted at the welding surfaces during upsetting.

Upsetting Time: In flash and upset welding, the time during upsetting.

V

Vertical Position: The position of welding wherein the axis of the weld is approximately vertical. (See fig. 9.)

Vertical Position: In pipe welding, the position of a pipe joint wherein welding is performed in the horizontal position and the pipe may or may not be rotated.

Voltage Regulator: An automatic electrical control device for maintaining a constant voltage supply to the primary of a welding transformer.

W

Wandering Block Sequence: A block sequence wherein successive blocks are completed at random after several starting blocks have been completed.

Wandering Sequence: A longitudinal sequence wherein the weld bead increments are deposited at random.

Wax Pattern: Wax molded around the parts to be welded by a thermit welding process to the form desired for the completed weld.

Weave Bead: A type of weld bead made with transverse oscillation. (See fig. 12.)

Weave Beading: The deposition of weave beads.

Weld: A localized coalescence of metal which is produced by heating to suitable temperatures, with or without the application of pressure, and with or without the use of filler metal. The filler metal either has a melting point approximately the same as the base metals or has a melting point below that of the base metals but above 800° F.

Weldability: The capacity of a metal to be welded under the fabrication conditions imposed into a specific, suitably designed structure and to perform satisfactorily in the intended service.

Weld Bead: A weld deposit resulting from a pass. See Stringer Bead and Weave Bead. (See also fig. 21.)

Weld Crack: A crack in weld metal.

Weld Delay Time: In spot and projection welding, the time that the weld time is delayed to insure proper sequence of mechanical functions in relation to subsequent electrical functions.

Weld Gage: A device designed for checking the shape and size of welds.

Weld Interval: In resistance welding, the total of all heat and cool times when making a single, multiple-impulse weld.

Weld Interval Timer: In resistance welding, a device which controls heat and cool times and weld interval when making multiple-impulse welds singly or simultaneously.

Weld Metal: That portion of a weld which has been melted during welding.

Weld-Metal Area: The area of the weld metal as measured on the cross section of a weld. (See fig. 19.)

Weld Penetration: See Joint Penetration and Root Penetration.

Weld Time: In single-impulse welding and flash welding, the time that welding current is applied to the work in making a weld.

Weld Timer: In resistance welding, a device which controls only the weld time.

Welded Joint: A union of two or more members produced by the application of a welding process.

Welder: One who performs manual or semiautomatic welding operations or operates machine or automatic welding equipment.

Welding (noun): The metal-joining process used in making welds. See Forge Welding, Thermit Welding, Flow Welding, Gas Welding, Arc Welding, Resistance Welding, Induction Welding, and Brazing.

Welding Current: The current flowing through the welding circuit during the making of a weld. In resistance welding, the current used during preweld or postweld intervals is excluded.

Welding Cycle: In resistance welding, the complete series of events involved in the making of a weld.

Welding Generator: A generator used for supplying current for welding.

Welding Goggles: Goggles with tinted lenses, used during welding or oxygen cutting, which protect the eyes from harmful radiation and flying particles.

Welding Leads: The work lead and electrode lead of an arc-welding circuit. (See figs. 17 and 18.)

Welding Machine: Equipment used to perform the welding operation. For example, spot-welding machine, arc-welding machine, seam-welding machine, etc.

Welding Pressure: The pressure exerted during the welding operation on the parts being welded.

Welding Procedure: The detailed methods and practices including joint welding procedure involved in the production of a weldment.

Welding Process: A metal-joining process wherein coalescence is produced by heating to suitable temperatures, with or without the application of pressure, and with or without the use of filler metal. See Forge Welding, Thermit Welding,

Flow Welding, Gas Welding, Arc Welding, Resistance Welding, Induction Welding, and Brazing.

Welding Rod: Filler metal, in wire or rod form, used in gas welding and brazing processes, and in those arc-welding processes wherein the electrode does not furnish the filler metal.

Welding Sequence: The order of making the welds in a weldment.

Welding Technique: The details of a manual, machine, or semi-automatic welding operation which, within the limitations of the prescribed joint welding procedure, are controlled by the welder.

Welding Tip: A welding-torch tip designed for welding.

Welding Torch: A device used in gas welding or torch brazing for mixing and controlling the flow of gases.

Welding Transformer: A transformer used to supply current for welding.

Weldment: An assembly whose component parts are joined by welding.

Work Lead: The electric conductor between the source of arc-welding current and the work. (See figs. 17 and 18.)

12. Welding Symbols.—Welding symbols used on Bureau of Reclamation designs are substantially in accord with recommendations of the American Welding Society (AWS), which were approved by the American Standards Association (ASA) on November 4, 1942. Most of the symbols applicable to Bureau work and their meanings are shown in figure 32. Inspectors should familiarize themselves with these symbols in order to determine whether the types and sizes of welds specified on the design drawings are being used in fabrication and erection. Adherence to design weld details should be checked, as a weld of inadequate size may result in a serious structural failure. In the case of groove, fillet, and flash or upset welding symbols, the arrow connects the welding-symbol reference line to one side of the joint, which side is considered the "arrow" side of the joint. The side opposite the arrow side of the joint is considered the "other" side of the joint. In the case of plug, slot, spot, seam, and projection welding symbols, the arrow connects the welding-symbol reference line to the outer surface of one of the members of the joint at the centerline of the desired weld. The member to which the arrow points is considered the arrow-side member and the other member of the joint is considered the other-side member. Where a joint is designated by a single line on the drawing, and the arrow of a welding symbol is directed to

AMERICAN WELDING SOCIETY

SUMMARY OF STANDARD WELDING SYMBOLS

IDENTIFICATION OF *ARROW* SIDE AND *OTHER* SIDE OF JOINT AND *ARROW*-SIDE AND *OTHER*-SIDE *MEMBER* OF JOINT

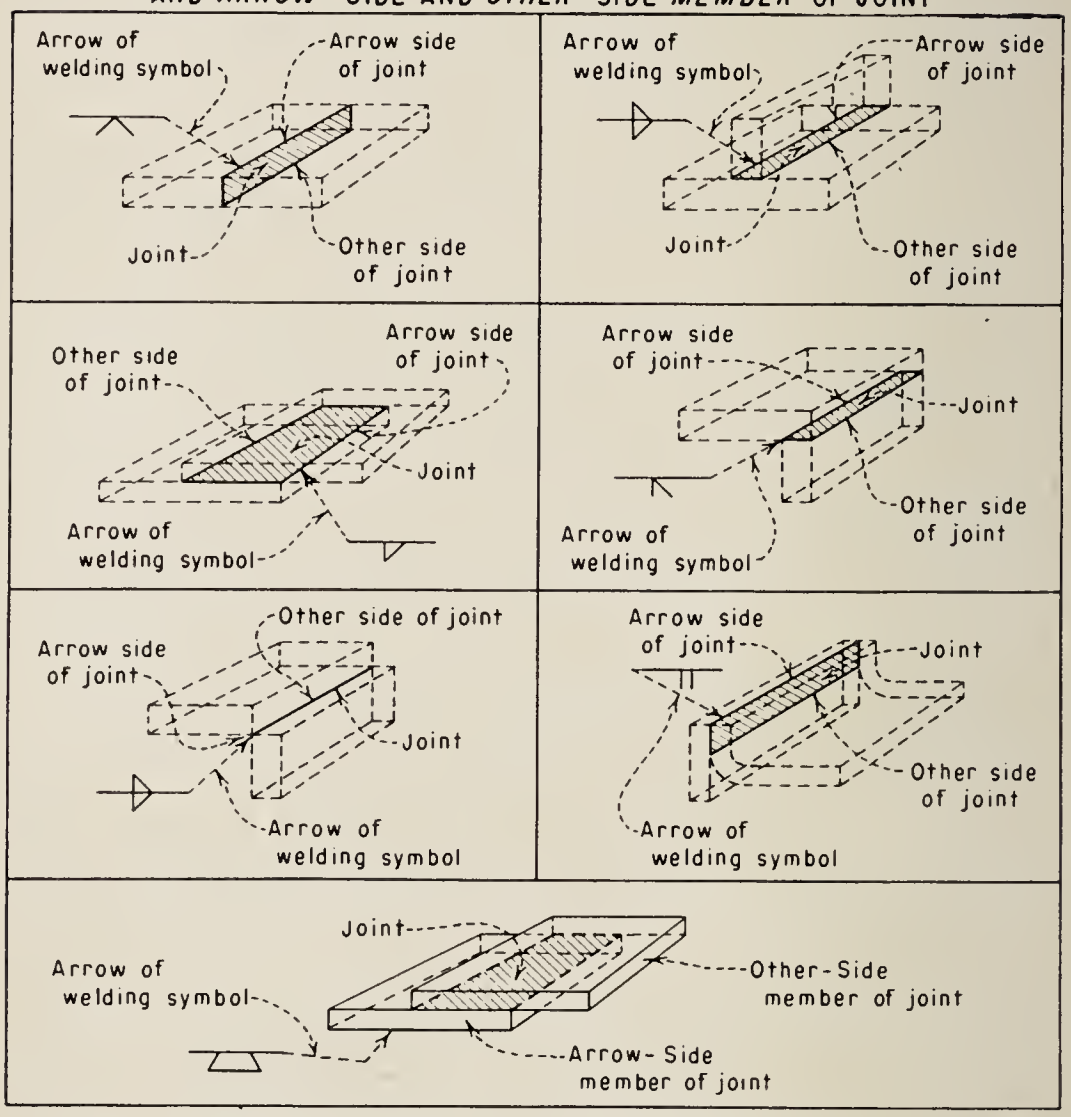

LOCATION OF ELEMENTS OF A WELDING SYMBOL

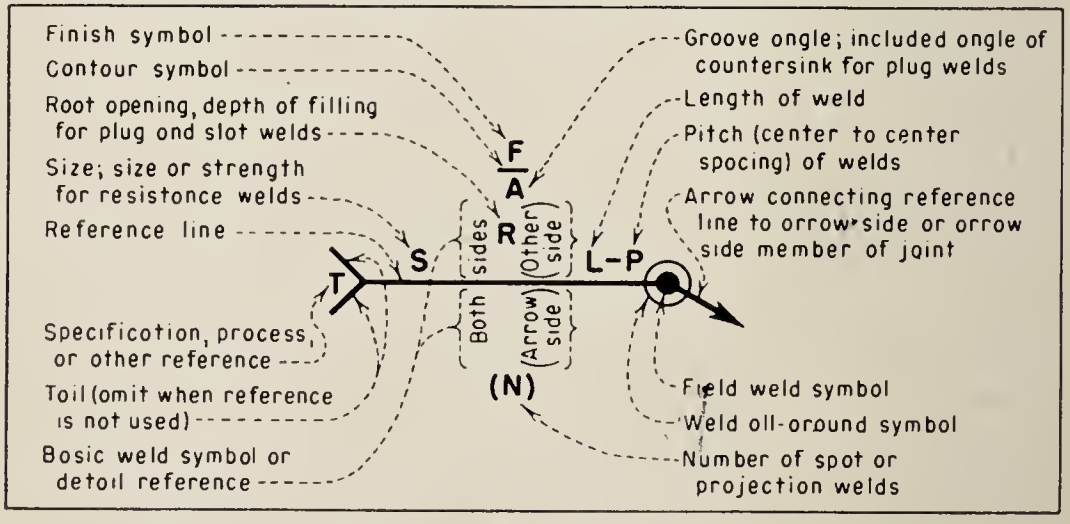

Figure 32—Fusion welding symbols. (Sheet 1 of 3.)

BASIC WELDING SYMBOLS

LOCATION SIGNIFICANCE	ARC AND GAS WELDING SYMBOLS							
	BEAD	FILLET	PLUG OR SLOT	GROOVE				
				SQUARE	V	BEVEL	U	J
ARROW SIDE	Groove weld symbol							
OTHER SIDE	Groove weld symbol							
BOTH SIDES	Not used		Not used					
NO ARROW-SIDE OR OTHER SIDE SIGNIFICANCE		Not used	Not used	Not used	Not used	Not used	Not used	Not used

LOCATION SIGNIFICANCE	RESISTANCE WELDING SYMBOLS			
	PROJECTION	SPOT	SEAM	FLASH OR UPSET
ARROW SIDE		Not used	Not used	Not used
OTHER SIDE		Not used	Not used	Not used
BOTH SIDES	Not used	Not used	Not used	Not used
NO ARROW-SIDE OR OTHER SIDE SIGNIFICANCE	Not used			

SUPPLEMENTARY SYMBOLS USED WITH WELDING SYMBOLS

WELD-ALL-AROUND SYMBOL

Weld-all-around symbol indicates that weld extends completely around the joint

FIELD WELD SYMBOL

Field weld symbol indicates that weld is to be made at a place other than that of initial construction

FLUSH-CONTOUR SYMBOL

Flush contour symbol indicates face of weld to be made flush; when used without a finish symbol, indicates weld to be made flush without subtractive finishing

M

Finish symbol (user's std) indicates method of obtaining specified contour but not degree of finish

CONVEX-CONTOUR SYMBOL

Convex-contour symbol indicates face of weld to be finished to convex contour

G

Finish symbol (user's std) indicates method of obtaining specified contour but not degree of finish

Figure 32—Fusion welding symbols. (Sheet 2 of 3.)

244795—53——5

TYPICAL WELDING SYMBOLS

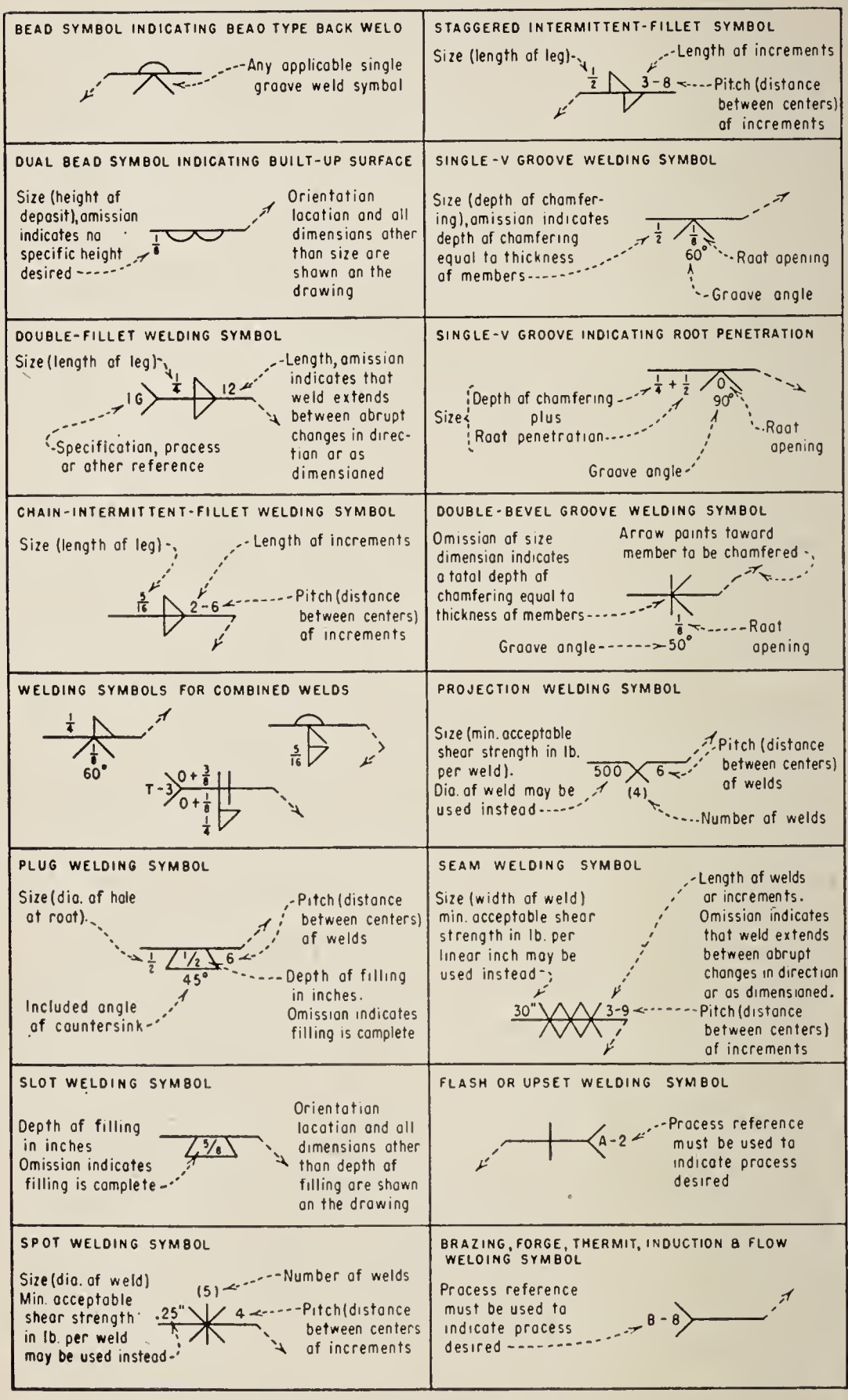

Figure 32—Fusion welding symbols. (Sheet 3 of 3.)

this line, the arrow side of the joint is considered the near side of the joint in accordance with the usual conventions of drafting. Where a joint is designated on a drawing as an area parallel to the plane of projection, and the arrow of a welding symbol is directed to that area, the arrow-side member of the joint is considered the near member of the joint in accordance with the usual conventions of drafting.

CHAPTER II—WELDING MATERIALS

13. Types of Steels.—The ultimate aim in welding is to produce joints of the same strength, ductility, and impact resistance as the material to be welded. The weldability of metals depends on a number of factors such as chemical and physical properties, metallurgical characteristics, type of electrode, the welding technique used, and the heat treatment employed before and after welding. It is therefore important in the welding of steels that only steel types of proven welding quality be used. Carbon content, due to its air-hardening effect, has an important influence on the weldability of steel. Other elements such as manganese, molybdenum, nickel, and chromium in quantity, tend to intensify this hardening effect. Therefore, when these other elements are present in a steel to be welded, it is desirable that the carbon content of that steel be low. The carbon content in any steel used for welded construction should not exceed 0.35 percent.

Steels recommended for welding which are produced in accordance with specifications of the American Society for Testing Materials (ASTM) have guaranteed chemical and physical properties which are checked by a ladle analysis from a test ingot taken during the pouring of each melt and by subsequent check analyses. The chemical composition thus determined is reported in certified mill-test reports furnished to the purchaser, who may make a check analysis from the finished material of each melt. In some cases mill inspection of the steel is required before shipment. Properties of the steels are subject to change from time to time, and the changes are reported in periodic revisions of ASTM specifications. Low-carbon steels are available in flange, firebox, and structural qualities, and are produced in accordance with ASTM standard specifications. In addition to these steels, there are available the low-alloy and high-strength steels and the so-called patented or trade-name steels, the latter being offered by steel companies in accordance with their own specifications to meet certain requirements of strength and corrosion resistance.

Experience in welding some of the low-alloy and high-strength steels is as yet somewhat limited. Some grades, especially in the heavier sections, must be preheated prior to

welding, and stress-relieved after welding. This treatment will prevent brittle welds and cracks, increase the ductility of the weld joints, and assure dimensional stability where machining is required. Preheating is to 200° F. or more depending on the type of steel, and stress relieving for carbon steels is at 1,100° to 1,250° F.

A list of commonly used steels for welded structures is shown in table 1. Essential data are given in the table for evaluating adaptability of the steels for certain uses, such as for steel structures, tanks, conduits, or turbine casings. All steels listed are semi-killed, except A201, A212, and A225, which are fully killed with plates over 2 inches thick normalized.

14. Types of Electrodes.—Electrodes of the heavy flux-coated type should be used for all important welding work. Although welds made with bare or lightly coated electrodes have satisfactory tensile strength, they are of low ductility and have low fatigue and impact resistance. This is due partly to the vaporization or oxidation in the arc of essential elements such as manganese, and partly to the presence of oxides and nitrides resulting from atmospheric contamination of the deposited weld metal. Electrode coatings overcome these defects. The term "shielded-arc coating" applies to any covering on the core wire which effectively shields both the arc and the weld metal during the entire temperature range from liquefaction to solidification, and improves the physical and chemical properties of the weld. The coating also provides better arc characteristics and permits greater variation in arc length, as well as increased speed in welding. Its composition determines the best polarity for the electrode, influences the degree of penetration of the arc, and provides insulation, better arc conduction, and better metal transfer.

Lightly coated, mild-steel electrodes of the AWS E–4500 class (E–4510 and E–4511) are widely used for repair work and for structural welding. Electrodes of this type are satisfactory only where service conditions are not too severe. Electrode E–4510 is usable only with direct current and on straight polarity (electrode negative). In this classification, the E–4520 and E–4521 electrodes are adapted only for flat-position and horizontal fillet welding.

The heavily coated, mild-steel, shielded-arc electrode E–6010 is the most extensively used type for all-position welding in steel structures such as buildings, tanks, and pipe installations which cannot readily be positioned and require considerable welding in the vertical and overhead positions.

Electrodes of this classification are usable only with direct current on reverse polarity (electrode positive). The core wire is of low-carbon steel, generally 0.10 to 0.15 percent carbon and 0.40 to 0.60 percent manganese, and the coating is commonly classified as a cellulosic type. The E–6012 electrode is an all-position direct-current straight-polarity-type electrode, particularly adapted for single-layer welding of horizontal fillets. It may also be used with alternating current with good results. Electrode E–6013 is similar to E–6012 with improved arc characteristics for use with alternating current. For vertical and overhead welds made with the above-noted electrodes, sizes not exceeding 3/16 inch should be used. Electrodes E–6015 and E–6016 have coatings of low hydrogen sodium and potassium, respectively. They are all-position electrodes, E–6015 being used with direct current, reversed polarity, and E–6016 with either alternating or direct current and reversed polarity. In both classifications, electrodes not over 5/32 inch are used. The E–6020 electrode is a heavily mineral-coated electrode intended for horizontal fillets and flat positions with either direct or alternating current. It has numerous applications where high-quality weld metal is required and where the work is positioned. The E–6030 classification overlaps with E–6020, except that its coating produces a smaller amount of less-fluid slag. Table 5 in section 18 shows the classification, strength requirements, type of coating, welding position, and type of current to be used for "Mild Steel Arc-welding Electrodes," ASTM designation A 233–48T.

Classifications E–7010 and up are heavily coated, low-alloy steel electrodes. Electrode E–7011 is a mineral-coated type with added alloying ingredients in either the core wire or the coating. This electrode is an all-position type for use with either direct or alternating current. Electrodes E–7020 and E–7030 may be compared with E–6020 in all operating respects except that the tensile strength of the deposited weld metal is higher. They are used for horizontal fillets and flat-position work with either direct or alternating current. Table 2 contains a list of comparable mild-steel electrodes, and table 3 a list of low-alloy steel electrodes compiled from manufacturers' data and published in "The Iron Age" in 1951. The tables show the trade designations and numbers used by different manufacturers, for electrodes available at that time. The first two digits in the classification numbers represent the minimum tensile strength in thousands of pounds per

Table 1—Welding quality steels.

ASTM DESIGNATION	DESCRIPTION OF STEEL: ASTM STANDARD OR TENTATIVE SPECIFICATIONS FOR:	QUALITY	GRADE	MAXIMUM THICKNESS INCHES
A7-50T	Steel for bridges and buildings	Struct.	—	—
A30-50T	Boiler and firebox steel for locomotives	Flange	—	2
		Firebox	A	2
			B	2
A113-50T	Structural steel for locomotives and cars	Struct.	A	2
			B	2
		Plates	C	2
A283-50T	Low and intermediate tensile strength carbon-steel plates of structural quality	Struct.	A	2
			B	2
			C	2
			D	2
A284-50T	Intermediate tensile strength carbon-silicon steel plates for machine parts and general construction	—	A	12
			B	12
			C	12
A285-50T	Low and intermediate tensile strength carbon-steel plates of flange and firebox qualities	Flange	A	2
			B	2
			C	2
		Firebox	A	2
			B	2
			C	2
A201-50T	Carbon-silicon steel plates of intermediate ranges for fusion-welded boilers and other pressure vessels	Flange	A	2
			B	2
		Firebox	A	12
			B	8
A204-50T	Molybdenum-steel plates for boilers and other pressure vessels	Flange	A	2
			B	2
			C	2
		Firebox	A	6
			B	6
			C	4
A212-50T	High tensile strength carbon-silicon steel plates for boilers and other pressure vessels	Flange	A	2
			B	2
		Firebox	A	6
			B	6
A225-50T	Manganese-vanadium steel plates for boilers and other pressure vessels	Flange	A	2
			B	2
		Firebox	A	4
			B	4

Detailed information is given in A.S.T.M. Specifications
A7, A113, A283, and A285 are semi-killed steels.
A284, A201, A204, A212, and A225 are fully-killed steels and plates over 2" thick are normalized.

Table 1—Welding quality steels.—Continued.

QUALITY	GRADE	CHEMICAL COMPOSITION MAXIMUM VALUES %									TENSILE PROPERTIES MINIMUM VALUES				RECOM. DESIGN STRESS FOR PLATES, P.S.I.
		C	Mn	Si	Cr	V	Cu	Mo	P	S	TENSILE STRENGTH P.S.I.	YIELD POINT P.S.I.	PERCENT ELONGATION IN 8"	PERCENT ELONGATION IN 2"	
Str.	—	—	—	—	—	—	—	—	.10	.05	60,000	33,000	25	22	13,800
Flg	—	—	.60	—	—	—	—	—	.05	.05	55,000	27,500	27	—	13,750
F'b.	A	.30	.80	—	—	—	.25	—	.04	.04	52,000	27,500	27	—	13,000
	B	.30	.80	—	—	—	.25	—	.04	.04	48,000	24,000	31	—	12,000
Str.	A	—	—	—	—	—	—	—	.06	.05	60,000	30,000	25	22	13,800
	B	—	—	—	—	—	—	—	.06	.06	50,000	25,000	30	22	11,500
Pls.	C	—	—	—	—	—	—	—	.06	.06	48,000	24,000	31	—	11,050
Str.	A	—	—	—	—	—	—	—	.06	.05	45,000	24,000	33	30	10,350
	B	—	—	—	—	—	—	—	.06	.05	50,000	27,000	30	27	11,500
	C	—	—	—	—	—	—	—	.06	.05	55,000	30,000	27	24	12,650
	D	—	—	—	—	—	—	—	.06	.05	60,000	33,000	25	22	13,800
—	A	.31	.80	.30	—	—	—	—	.04	.05	50,000	25,000	30	32	12,500
	B	.35	.80	.30	—	—	—	—	.04	.05	55,000	27,500	27	27	13,750
	C	.39	.80	.30	—	—	—	—	.04	.05	60,000	30,000	25	25	15,000
Flg.	A	—	.80	—	—	—	—	—	.06	.05	45,000	24,000	33	—	11,250
	B	—	.80	—	—	—	—	—	.06	.05	50,000	27,000	30	—	12,500
	C	—	.80	—	—	—	—	—	.06	.05	55,000	30,000	27	—	13,750
F'b.	A	.17	.80	—	—	—	—	—	.04	.04	45,000	24,000	34	—	11,250
	B	.22	.80	—	—	—	—	—	.04	.04	50,000	27,000	31	—	12,500
	C	.30	.80	—	—	—	—	—	.04	.04	55,000	30,000	28	—	13,750
Flg.	A	.24	.80	.30	—	—	—	—	.04	.05	55,000	27,500	27	—	13,750
	B	.27	.80	.30	—	—	—	—	.04	.05	60,000	30,000	25	—	15,000
F'b.	A	.35	.80	.30	—	—	—	—	.035	.04	55,000	27,500	28	32	13,750
	B	—	.80	.30	—	—	—	—	.035	.04	60,000	30,000	26	29	15,000
Flg.	A	.21	.90	.30	—	—	—	.60	.04	.05	65,000	37,000	25	—	16,250
	B	.23	.90	.30	—	—	—	.60	.04	.05	70,000	40,000	23	—	17,500
	C	.26	.90	.30	—	—	—	.60	.04	.05	75,000	43,000	21	—	18,750
F'b	A	.25	.90	.30	—	—	—	.60	.035	.04	65,000	37,000	25	27	16,250
	B	.27	.90	.30	—	—	—	.60	.035	.04	70,000	40,000	24	25	17,500
	C	.28	.90	.30	—	—	—	.60	.035	.04	75,000	43,000	22	23	18,750
Flg.	A	.31	.90	.30	—	—	—	—	.04	.05	65,000	32,500	24	27	16,250
	B	.33	.90	.30	—	—	—	—	.04	.05	70,000	35,000	22	25	17,500
F'b.	A	.33	.90	.30	—	—	—	—	.035	.04	65,000	32,500	25	27	16,250
	B	.35	.90	.30	—	—	—	—	.035	.04	70,000	35,000	23	25	17,500
Flg.	A	.18	1.45	.30	—	.14	—	—	.04	.05	70,000	40,000	23	—	17,500
	B	.20	1.45	.30	—	.14	—	—	.04	.05	75,000	43,000	21	—	18,750
F'b.	A	.18	1.45	.30	—	.14	—	—	.035	.04	70,000	40,000	24	25	17,500
	B	.20	1.45	.30	—	.14	—	—	.035	.04	75,000	43,000	22	23	18,750

Design stress for A7, A113, and A283 = $\frac{\text{Tensile stgth}}{4}$ x .92 ; where .92 is a welding quality factor.

Table 2—Mild-steel arc-welding electrodes. ASTM designation A 233–48T

ASTM-AWS Specification No.	Electrode coating	Welding position	Air Reduction Sales Co.	Alloy Rods Co.	American Agile Corp.	Arcos Corp.	Canadian Liquid Air Co.	Champion Rivet Co.	Eutectic Welding Alloys Corp.
E-4510	Sulcoated or Light Coated.	F, V, OH, H	Airco 41,63				SC 15	Processed Sulcoat Speed No. 44.	
E-4520	Sulcoated or Light Coated	H-Fillets, F.					Type A		
E-6010	High Cellulose Sodium	F, V, OH, H.	Airco 78, 78E.	Weld Arc Type 6010.	Agile White		LA Type 6010.	Blue Devil	Steel-Tectic.
E-6011	High Cellulose Potassium.	F, V, OH, H.	Airco 230	Weld Arc Type 6011.	Agile Blue		LA Type 6011.	Bluedac	Steel-Tectic.
E-6012	High Titania Sodium	F, V, OH, H.	Airco 87, 323 387	Weld Arc Type 6012	Agile Red-White		LA Type 6012	Gray Devil Gray Devil No. 2 Gray Devil HP	Steel Tectic.
E-6013	High Titania Potassium	F, V, OH, H.	Airco 90, 90-A	Weld Arc Type 6013	Agile Blue-Red, Brown		LA Type 6013	Graydac Tan Devil	EutecTrodes 60 (ac), 600 (dc), 6,000 (ac-dc)
E-6015	Low Hydrogen Sodium	F. V, OH, H.		Weld Arc Type 7015	Agile FMS		HFD		EutecTrode 660 (dc).
E-6016	Low Hydrogen Potassium	F, V, OH, H.	Airco 312	Weld Arc Type 7016	Agile FMS-AC	Tensilend 70	HFA	Hy-Lo	
E-6020	High Iron Oxide	H-Fillets, F.	Airco 81, 315	Weld Arc Type 6020	Agile Blue-Grey		LA Type 6020	Black Devil	
E-6030	High Iron Oxide	F			Agile White-Grey			Red Devil	

Table 2—Mild-steel arc-welding electrodes. ASTM designation A 233–48T—Continued

ASTM-AWS Specification No.	Electrode coating	Welding position	General Electric Co.	Harnischfeger Corp.	Hobart Bros. Co.	Hollup Corp.	Lincoln Electric Co.	McKay Co.	Marquette Mfg. Co.
E-4510	Sulcoated or Light Coated.	F, V, OH, H.	F, L	Washcote	Sulkote	Type 30-S	Stable-Arc	McKay 21	No. 101.
E-4520	Sulcoated or Light Coated.	H-Fillets, F.	W-4, W-1049.			Type 30-XL		McKay 3	
E-6010	High Cellulose Sodium.	F, V, OH, H.	W-22, W-22S.	AP, APV	No. 10, No. 55.	Sureweld B, BP.	Fleetweld 5, Lightweld.	McKay 15, 15-D.	No. 105.
E-6011	High Cellulose Potassium.	F, V, OH, H.	W-26	AC-1	No. 335	Sureweld CB.	Fleetweld 35	McKay 11	No. 130, No. 140.
E-6012	High Titania Sodium.	F, V, OH, H.	W-20, W-28, W-29.	PF, PFA	No. 12, No. 77.	Sureweld N, NM, G, LG.	Fleetweld 7, 72.	McKay 17, 116.	No. 120.
E-6013	High Titania Potassium.	F, V, OH, H.	W-25	AC-3, SM	No. 13, No. 313, No. 447.	Sureweld CN, UE.	Fleetweld 37, 47. Planeweld 2	McKay 24	No. 151.
E-6015	Low Hydrogen Sodium.	F, V, OH, H.		70 LA	70-PL			Pluralloy 70.	
E-6016	Low Hydrogen Potassium.	F, V, OH, H.	W-32	70 LA-2	No. 16		Shield-Arc LH70.		
E-6020	High Iron Oxide.	H-Fillets, F.	W-24, W-27	DH-2	No. 111	Sureweld FD.	Fleetweld 11	McKay 16	No. 115.
E-6030	High Iron Oxide.	F				Sureweld A		McKay 18	

Table 2—Mild-steel arc-welding electrodes. ASTM designation A 233–48T—Continued

ASTM-AWS Specification No.	Electrode coating	Welding position	Metal & Thermit Corp.	Page Steel & Wire	Reid-Avery Co.	A. O. Smith Corp.	Steel Co. of Canada	Universal Welder Corp.	Westinghouse Electric Corp.
E-4510	Sulcoated or Light Coated.	F, V, OH, H.	----------	Page B bare.	Blue Label.	----------	Stelco Electrod No. 4 bare, No. 4 FCW.	Staldarc B-11.	Sulcoat Grade 18.
E-4520	Sulcoated or Light Coated.	H-Fillets, F.	----------	----------	D, M-9 Knurled.	----------	----------	Staldarc G-11.	
E-6010	High Cellulose Sodium.	F, V, OH, H.	Murex Type R.	----------	Raco 7	SW-10	Stelco Electrod No. 704, 704D.	Hevicoat RP. Easyweld BL-10.	Flexarc AP.
E-6011	High Cellulose Potassium.	F, V, OH, H.	Murex Type A.	----------	Raco 11	SW-14	Stelco Electrod No. 504.	Hevicoat AC-11. Easyweld BL-11.	Flexarc ACP.
E-6012	High Titania Sodium.	F, V, OH, H.	Murex Genex, Genex M.	----------	Raco 8	SW-11, SW-17.	Stelco Electrod No. 604.	Hevicoat SP-2. Easyweld RW-12.	Flexarc FP, FP-2.
E-6013	High Titania Potassium.	F, V, OH, H.	Murex Alternex, Type U.	Page Hi-Tensile G.	Raco 13A, 13B.	SW-15, SW-16.	Stelco Electrod No. 404.	Hevicoat AC-13. Easyweld BR-13.	Flexarc SW, SW-2.
E-6015	Low Hydrogen Sodium.	F, V, OH, H.	----------	Page Hi-Tensile M.	Raco 180-15.	----------	----------	Hevicoat LH. Easyweld FMS-15.	
E-6016	Low Hydrogen Potassium	F, V, OH, H.	Murex Type HTS.	----------	Raco 180-16.	SW-64	----------	Easyweld FMS-16.	Flexarc LOH-2.

E-6020	High Iron Oxide.	H-Fillets, F.	Murex Type FHP.	----------	Raco 20	SW-35	Stelco Electrod No. 804.	Hevicoat FF. Easyweld BG-20.	Flexarc DH.
E-6030	High Iron Oxide.	F	Murex Type D.	----------	Raco 5	SW-20, SW-25.	Stelco Electrod No. 904.	Easyweld WG-30.	

Table 3—Low-alloy-steel arc-welding electrodes. ASTM designation A 316–48T

ASTM-AWS Specification No.	Electrode coating	Welding position	Air Reduction Sales Co.	Alloy Rods Co.	Arcos Corp.	Canadian Liquid Air Co.	Champion Rivet Co.	Eutectic Welding Alloys Co.	General Electric Co.	Harnischfeger Corp.	Hobart Bros. Corp.	Hollup Corp.
E-7010	High Cellulose Sodium.	F, V, OH, H.	Airco 93	Weld Arc Type 7010.	----------	----------	Blue Devil 85.	----------	W-52	CM-50	No. 885	Sureweld MLY-50.
E-7011	High Cellulose Potassium.	F, V, OH, H.	Airco 382.	Weld Arc Type 7011.	----------	----------	----------	Eutec-Trode 66 (ac)	W-56	CM-50-1	----------	Sureweld MLY-C.
E-7015	Low Hydrogen Sodium.	F, V, OH, H.	----------	Weld Arc Type 7015.	----------	HFD	----------	----------	----------	70-LA	----------	
E-7016	Low Hydrogen Potassium.	F, V, OH, H.	Airco 327, 396.	Weld Arc Type 7016.	Tensilend 70, 70N.	HFA	Hy-Lo	----------	W-2180	70-LA-2	----------	Sureweld 7016.
E-7020	High Iron Oxide	H-Fillets, F.	Airco 94	Weld Arc Type 7020.	----------	----------	Black Devil 75.	----------	W-54	CM-50-2	No. 111-HT.	Sureweld MLY-A.
E-8015	Low Hydrogen Sodium.	F, V, OH, H.	----------	Weld Arc Type 2315.	Chromend 1M. Nickend 2.	----------	----------	----------	----------	75-LP, 80-LE.	90-PL	
E-8016	Low Hydrogen Potassium.	F, V, OH, H.	Airco 398.	Weld Arc Type 2316.	----------	----------	Chromoloy 8016.	----------	W-62	----------	----------	Sureweld 8016.
E-9015	Low Hydrogen Sodium.	F, V, OH, H.	----------	Weld Arc Type 9015.	Chromend 2M.	----------	----------	----------	----------	90-LE, 40-C, AW-2-B	----------	

E-9016	Low Hydrogen Potassium.	F,V, OH, H.	Airco 351, 354.	Weld Arc Type 9016.	Manganend 1M.	----------	Chromoloy 9016.	----------	W-68	P & H No. 7.	----------	Sureweld 9016.
E-10013	High Titania Potassium.	F,V, OH, H.	----------	----------	----------	----------	Chromoloy 10013.	Eutec-Trode 71 (ac-dc).	W-55	AW-4	----------	
E-10015	Low Hydrogen Sodium.	F, V, OH, H.	----------	Weld Arc Type 10015.	----------	----------	----------	----------	----------	----------	----------	
E-10016	Low Hydrogen Potassium.	F, V, OH, H.	Airco 394, 395, 397.	Weld Arc Type 10016.	Manganend 2M, Tensilend 100.	----------	Chromoloy 10016.	----------	W-65	90-LH-2, P & H No. 12.	----------	Sureweld 10016.
E-12015	Low Hydrogen Sodium.	F, V, OH, H.	----------	Weld Arc Type 12015.	Tensilend 120.	----------	----------	----------	----------	P & H 17, P & H 21.	----------	

Table 3—Low-alloy-steel arc-welding electrodes. ASTM designation A 316–48T—Continued

ASTM-AWS Specification No.	Electrode coating	Welding position	Lincoln Electric Co.	McKay Co.	Marquette Mfg. Co.	Metal & Thermit Corp.	Page Steel & Wire	Reid-Avery Co.	A. O. Smith Corp.	Steel Co. of Canada	Universal Welder Corp.	Westinghouse Electric Corp.
E-7010	High Cellulose Sodium.	F, V, OH, H.	Shield Arc 85.	McKay 715.	----------	Murex Molex.	----------	Raco 74	SW-75, SW-80.	Stelco Electrod No. 710.	Hevicoat HT-10.	Flexarc AP-MO.
E-7011	High Cellulose Potassium.	F, V, OH, H.	----------	McKay 711.	----------	Murex Type MA.	----------	----------	----------	----------	----------	Flexarc ACP-MO.
E-7015	Low Hydrogen Sodium.	F, V, OH, H.	----------	Puralloy 80.	----------	----------	Page Hi-Tensile M.	Raco 180-15.	----------	----------	----------	
E-7016	Low Hydrogen Potassium.	F, V, OH, H.	Shield Arc LH-70.	----------	----------	----------	----------	Raco 180-16.	SW-64	----------	----------	Flexarc LOH-2.
E-7020	High Iron Oxide.	H-Fillets, F.	Fleetweld 11-HT.	McKay 716.	----------	Murex Type DM.	----------	Raco 64	SW-76, SW-78.	Stelco Electrod No. 720.	Hevicoat HT-20.	Flexarc DH-MO.
E-8015	Low Hydrogen Sodium.	F, V, OH, H.	----------	Puralloy 90.	----------	----------	----------	Raco ½ CR-½ Mo.	----------	----------	----------	
E-8016	Low Hydrogen Potassium.	F, V, OH, H.	----------	----------	----------	Murex Type 8016-Q.	----------	----------	SW-90	----------	----------	
E-9015	Low Hydrogen Sodium.	F, V, OH, H.	----------	Puralloy 100.	----------	----------	----------	Raco 1¾ Cr-1 Mo.	----------	----------	----------	

E-9016	Low Hydrogen Potassium.	F, V, OH, H.				Murex Type 2116.			SW-89		
E-10013	High Titania Potassium.	F, V, OH, H.	Plane-weld 1.		No. 110			Raco 10013	SW-88		
E-10015	Low Hydrogen Sodium.	F, V, OH, H.		Puralloy 110.				Raco 230-15.			
E-10016	Low Hydrogen Potassium.	F, V, OH, H.				Murex Type AWL, 4216.			SW-103		
E-12015	Low Hydrogen Sodium.	F, V, OH, H.						Raco 260-15.			

square inch in the as-welded condition, the third digit designates the welding positions for which the electrode is suitable, and the fourth digit indicates the welding current to be used (see table 5). If the third digit is 1, the electrode is suitable for all-position welding; if it is 2, the electrode is usable for horizontal fillet and flat positions only; if 3, the electrode may be used for welds in the flat position only. Thus, the classification number furnishes all essential information regarding the various electrodes.

15. Electrode Requirements.[1]—When necessary to estimate the quantity of electrodes required for a certain job, electrode losses must be taken into consideration, as the weight of electrode required differs from the weight of metal deposited by the weight of such losses. Electrode losses consist of scrap-end losses and spatter-and-flux losses, which vary in different shops.

Table 4 shows the electrode requirements for various types of joints with and without reinforcement, and for bare and coated electrodes. Labor and power costs for a given job and joint may be estimated from the weight of electrode required. The quantities shown in the tables include electrode losses, and represent a fair approximation of electrode requirements. They are based on average losses, allowing 17 percent scrap-end loss, 13 percent spatter-and-flux loss for bare and thinly coated electrodes, and 27 percent spatter-and-flux loss for heavily coated electrodes. More accurate results can be obtained in specific cases where electrode losses have been established by experience, by using a formula for the weight of electrode required as follows:

$$\text{Weight of electrode required} = \frac{\text{Weight of steel deposited}}{1\text{—total electrode losses in percent}}$$

[1] From Wyer, R. F., and Smith, S. C., "Estimating the Cost of Arc Welding," General Electric Review, vol. 41, No. 11, November 1938.

Table 4—Electrode requirements for various types of welds.

(Manual Welding)

TYPE OF WELD	Size of Fillet L	WEIGHT OF ELECTRODES REQUIRED IN POUNDS PER LINEAR FOOT (Approx)		AMOUNT OF STEEL DEPOSITED PER LINEAR FOOT	
		Bare and Thinly Coated	Heavily Coated	Cu. In.	Pounds
NORMAL FILLET Fig. 1	1/8	0.039	0.048	0.094	0.027
	3/16	0.090	0.113	0.222	0.063
	1/4	0.151	0.189	0.375	0.106
	5/16	0.237	0.296	0.585	0.166
	3/8	0.341	0.427	0.844	0.239
	1/2	0.607	0.760	1.500	0.425
	5/8	0.947	1.185	2.340	0.663
	3/4	1.365	1.705	3.375	0.955
	1	2.420	3.030	6.000	1.698
POSITIONED FILLET Fig. 2	1/4	....	0.212	0.420	0.119
	5/16	....	0.334	0.660	0.187
	3/8	....	0.486	0.960	0.272
	1/2	....	0.850	1.680	0.475
	5/8	....	1.275	2.520	0.713
	3/4	....	1.820	3.600	1.020
	1	....	3.210	6.350	1.800
OUTSIDE CORNER FILLET 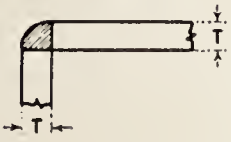 Fig. 3	T Inches				
	1/8	0.06	0.07	0.144	0.041
	3/16	0.13	0.16	0.336	0.095
	1/4	0.24	0.30	0.588	0.167
	5/16	0.37	0.46	0.923	0.261
	3/8	0.53	0.67	1.335	0.378
	1/2	0.95	1.19	2.350	0.665
	5/8	1.49	1.86	3.680	1.043
	3/4	2.15	2.68	5.300	1.502
	1	3.81	4.77	9.41	2.670

Table 4—Electrode requirements for various types of welds.—Continued.

(Manual Welding)

TYPE OF WELD	INCHES			WEIGHT OF ELECTRODES REQUIRED IN POUNDS PER LINEAR FOOT (Approx)				AMOUNT OF STEEL DEPOSITED PER LINEAR FOOT			
				WITHOUT REINFORCEMENT		*WITH REINFORCEMENT		WITHOUT REINFORCEMENT		*WITH REINFORCEMENT	
	T	W	S	Bare and Thinly Coated	Heavily Coated	Bare and Thinly Coated	Heavily Coated	Cu. In.	Pounds	Cu. In.	Pounds
SQUARE GROOVE 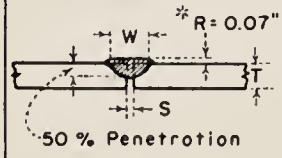 Fig.4	3/16	3/8	0	—	—	0.13	0.16	—	—	0.312	0.088
			1/16	0.03	0.04	0.16	0.20	0.071	0.020	0.384	0.109
	1/4	7/16	1/16	0.04	0.05	0.19	0.23	0.094	0.027	0.415	0.129
			3/32	0.06	0.07	0.20	0.26	0.140	0.039	0.504	0.143
	5/16	1/2	1/16	0.05	0.06	0.22	0.27	0.118	0.033	0.540	0.153
			3/32	0.07	0.09	0.24	0.30	0.176	0.050	0.600	0.170
SQUARE GROOVE 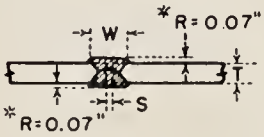 Fig.5	1/8	1/4	0	—	—	0.17	0.21	—	—	0.42	0.119
			1/32	0.02	0.03	0.19	0.24	0.047	0.013	0.467	0.132
	3/16	3/8	1/32	0.03	0.04	0.28	0.36	0.071	0.020	0.70	0.199
			1/16	0.06	0.07	0.31	0.39	0.141	0.040	0.77	0.218
	1/4	7/16	1/16	0.08	0.10	0.37	0.47	0.188	0.053	0.92	0.261
			3/32	0.12	0.14	0.43	0.53	0.282	0.080	1.02	0.288
If underside of top weld is chipped or burned out and welded, add 0.07 lb. to steel deposited (equivalent to approx. 0.10 lb. of thinly coated or 0.13 lb. of heavily coated electrodes)											
SQUARE GROOVE 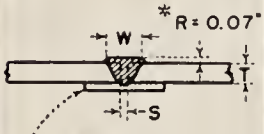 Fig.6	1/8	1/4	0	—	—	0.09	0.11	—	—	0.210	0.060
			1/16	0.04	0.05	0.12	0.15	0.094	0.027	0.304	0.086
	3/16	3/8	1/16	0.06	0.07	0.18	0.23	0.140	0.040	0.456	0.129
			3/32	0.09	0.11	0.21	0.27	0.211	0.060	0.526	0.149
	1/4	7/16	3/32	0.12	0.14	0.26	0.33	0.282	0.080	0.649	0.184
			1/8	0.15	0.19	0.30	0.38	0.376	0.107	0.742	0.210

Table 4—Electrode requirements for various types of welds.—Continued.

(Manual Welding)

TYPE OF WELD	INCHES			WEIGHT OF ELECTRODES REQUIRED IN POUNDS PER LINEAR FOOT (Approx)				AMOUNT OF STEEL DEPOSITED PER LINEAR FOOT			
				WITHOUT REINFORCEMENT		* WITH REINFORCEMENT		WITHOUT REINFORCEMENT		* WITH REINFORCEMENT	
	T	W	S	Bare and Thinly Coated	Heavily Coated	Bare and Thinly Coated	Heavily Coated	Cu. In.	Pounds	Cu. In.	Pounds
"V" GROOVE *R=0.08" 60° W T 3/16" 1/16" *Steel backing of some type Fig. 7	1/4	0.405		0.33	0.41	0.49	0.61	0.815	0.231	1.200	0.340
	5/16	0.476		0.46	0.58	0.65	0.81	1.14	0.323	1.595	0.452
	3/8	0.549		0.62	0.77	0.83	1.03	1.521	0.432	2.04	0.577
	1/2	0.693		1.00	1.25	1.26	1.58	2.460	0.696	3.12	0.882
	5/8	0.838		1.46	1.82	1.78	2.23	3.600	1.020	4.40	1.248
	3/4	0.982		2.00	2.50	2.39	3.00	4.960	1.405	5.91	1.675
	1	1.273		3.40	4.23	3.87	4.83	8.350	2.370	9.57	2.710
"V" GROOVE *R=0.08" 60° W T S 1/8" Fig. 8	1/4	0.207	1/16	0.12	0.15	0.20	0.25	0.300	0.085	0.504	0.143
	5/16	0.311	3/32	0.25	0.31	0.37	0.46	0.611	0.173	0.911	0.258
	3/8	0.414	1/8	0.40	0.50	0.56	0.70	0.995	0.282	1.390	0.394
	1/2	0.558	1/8	0.70	0.87	0.91	1.15	1.730	0.489	2.263	0.641
	5/8	0.702	1/8	1.08	1.35	1.34	1.68	2.660	0.753	3.330	0.942
	3/4	0.847	1/8	1.55	1.94	1.88	2.35	3.840	1.088	4.650	1.320
	1	1.138	1/8	2.76	3.45	3.20	4.00	6.810	1.930	7.90	2.240
"V" GROOVE *R=0.08" 60° W T S 1/8" *R=0.08" Fig. 9 Underside of weld chipped or burned out and welded.	1/4	0.207	1/16	—	—	0.32	0.41	—	—	0.815	0.231
	5/16	0.311	3/32	—	—	0.49	0.62	—	—	1.225	0.346
	3/8	0.414	1/8	—	—	0.68	0.85	—	—	1.680	0.475
	1/2	0.558	1/8	—	—	1.16	1.45	—	—	2.870	0.811
	5/8	0.702	1/8	—	—	1.59	1.99	—	—	3.940	1.115
	3/4	0.847	1/8	—	—	2.13	2.66	—	—	5.250	1.490
	1	1.138	1/8	—	—	3.44	4.30	—	—	8.500	2.410

Table 4—Electrode requirements for various types of welds.—Continued.

(Manual Welding)

TYPE OF WELD	INCHES		WEIGHT OF ELECTRODES REQUIRED IN POUNDS PER LINEAR FOOT (Approx.)				AMOUNT OF STEEL DEPOSITED PER LINEAR FOOT			
			WITHOUT REINFORCEMENT		✳ WITH REINFORCEMENT		WITHOUT REINFORCEMENT		✳ WITH REINFORCEMENT	
	T	W	Bare and Thinly Coated	Heavily Coated	Bare and Thinly Coated	Heavily Coated	Cu. In.	Pounds	Cu. In.	Pounds
DOUBLE "V" GROOVE 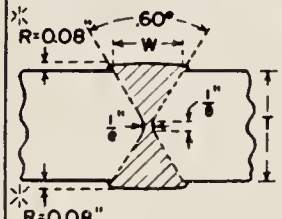 Fig. 10 If underside of top weld is chipped or burned out and welded, add 0.10 lb. to steel deposited (equivalent to approx. 0.14 lb. thinly coated or 0.18 lb. of heavily coated electrodes).	5/8	0.405	0.72	0.90	1.03	1.29	1.775	0.502	2.56	0.724
	3/4	0.468	0.98	1.22	1.34	1.68	2.410	0.682	3.31	0.937
	1	0.630	1.68	2.10	2.17	2.71	4.150	1.175	5.36	1.520
	1 1/4	0.774	2.53	3.17	3.13	3.92	6.27	1.775	7.75	2.195
	1 1/2	0.919	3.56	4.45	4.28	5.35	8.85	2.495	10.59	3.00
	1 3/4	1.063	4.77	5.95	5.58	6.98	11.80	3.335	13.82	3.91
	2	1.207	6.13	7.68	7.10	8.88	15.20	4.30	17.58	4.97
	2 1/4	1.352	7.70	9.60	8.75	10.95	19.00	5.38	21.65	6.12
	2 1/2	1.496	9.43	11.80	10.60	13.20	23.30	6.60	26.20	7.40
	3	1.784	13.36	16.70	14.75	18.50	33.00	9.35	36.50	10.33
	3 1/2	2.073	18.10	22.60	19.70	24.60	44.70	12.65	48.70	13.80
	4	2.368	23.50	29.40	25.40	31.70	58.15	16.45	62.80	17.80
"U" GROOVE 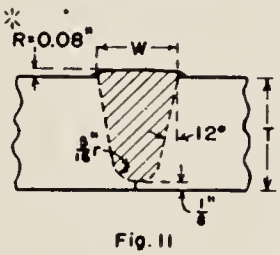 Fig. 11 If underside of weld is chipped or burned out and welded, add 0.19 lb. to steel deposited (equivalent to approx. 0.27 lb. of thinly coated or 0.34 lb. of heavily coated electrodes).	1/2	0.652	.....	1.18	.....	1.49	2.325	0.659	2.95	0.835
	5/8	0.705	.....	1.70	.....	2.04	3.345	0.947	4.02	1.140
	3/4	0.758	.....	2.24	.....	2.61	4.435	1.255	5.17	1.465
	1	0.865	.....	3.47	.....	3.89	6.870	1.945	7.70	2.180
	1 1/4	0.971	.....	4.86	.....	5.35	9.62	2.72	10.60	3.00
	1 1/2	1.077	.....	6.41	.....	6.95	12.66	3.59	13.72	3.89
	1 3/4	1.173	.....	8.08	.....	8.65	16.00	4.53	17.10	4.84
	2	1.292	.....	10.00	.....	10.65	19.75	5.60	21.04	5.96
	2 1/4	1.396	.....	12.05	.....	12.75	23.80	6.75	25.20	7.12
	2 1/2	1.502	.....	14.25	.....	15.00	28.20	7.98	29.65	8.40
	2 3/4	1.608	.....	16.60	.....	17.40	32.80	9.29	34.65	9.73
	3	1.715	.....	19.10	.....	20.00	37.80	10.70	39.45	11.19
	3 1/2	1.927	.....	24.70	.....	25.50	48.60	13.80	50.50	14.30
	4	2.140	.....	30.90	.....	31.90	61.00	17.30	63.10	17.90
MODIFIED "U" GROOVE 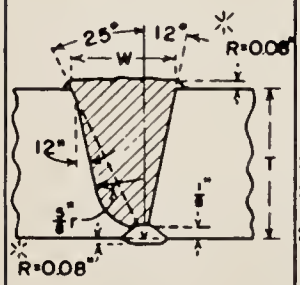 Fig. 12	1/2									
	5/8									
	3/4									
	1									
	1 1/4									
	1 1/2									
	1 3/4									
	2									
	2 1/4									
	2 1/2									
	2 3/4									
	3									
	3 1/2									
	4									

For irregular shapes, preparation of the modified "U" groove is usually more economical than the regular "U" groove (Fig. 11).

Approx. 5 per cent more electrode must be used to fill the joint than for the regular "U" groove.

Table 4—Electrode requirements for various types of welds.—Continued.

(Manual Welding)

TYPE OF WELD	INCHES		WEIGHT OF ELECTRODES REQUIRED IN POUNDS PER LINEAR FOOT (Approx)				AMOUNT OF STEEL DEPOSITED PER LINEAR FOOT			
			WITHOUT REINFORCEMENT		* WITH REINFORCEMENT		WITHOUT REINFORCEMENT		* WITH REINFORCEMENT	
	T	W	Bare and Thinly Coated	Heavily Coated	Bare and Thinly Coated	Heavily Coated	Cu. In.	Pounds	Cu. In.	Pounds
DOUBLE "U" 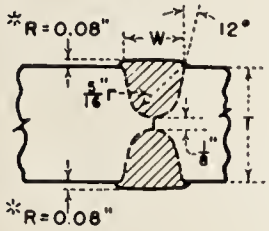 Fig. 13 If underside of top weld is chipped or burned out and welded, add 0.19 lb. to steel deposited (equivalent to approx. 0.27 lb. thinly coated or 0.34 lb. of heavily coated electrodes).	1	0.685	.....	2.86	.....	3.54	5.64	1.60	6.96	1.98
	1 1/4	0.731	.....	3.91	.....	4.62	7.75	2.19	9.15	2.59
	1 1/2	0.784	.....	5.05	.....	5.83	10.00	2.83	11.55	3.27
	1 3/4	0.838	.....	6.30	.....	7.12	12.47	3.53	14.10	3.99
	2	0.891	.....	7.60	.....	8.46	15.08	4.26	16.74	4.74
	2 1/4	0.944	.....	9.00	.....	9.90	17.80	5.04	19.60	5.55
	2 1/2	0.997	.....	10.45	.....	11.45	20.70	5.85	22.60	6.41
	2 3/4	1.050	.....	12.00	.....	13.05	23.80	6.73	25.80	7.30
	3	1.103	.....	13.85	.....	14.90	27.15	7.75	29.40	8.34
	3 1/2	1.211	.....	17.20	.....	18.40	33.98	9.61	36.20	10.30
	4	1.316	.....	21.00	...	21.30	41.55	11.75	44.00	12.50
BEVEL GROOVE 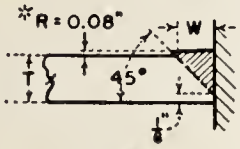 Fig. 14 If underside of weld is chipped or burned out and welded, add 0.19 lb. to steel required (equivalent to approx. 0.27 lb. thinly coated or 0.34 lb of heavily coated electrodes).	1/4	0.125	0.04	0.05	0.08	0.10	0.096	0.027	0.216	0.061
	5/16	0.188	0.09	0.11	0.16	0.20	0.216	0.061	0.396	0.112
	3/8	0.250	0.15	0.19	0.25	0.31	0.372	0.106	0.611	0.173
	1/2	0.375	0.34	0.43	0.49	0.61	0.840	0.238	1.211	0.343
	5/8	0.500	0.61	0.76	0.80	1.00	1.500	0.425	1.980	0.560
	3/4	0.625	0.95	1.19	1.19	1.50	2.340	0.663	2.950	0.835
	1	0.875	1.86	2.33	2.25	2.81	4.590	1.303	5.57	1.575
DOUBLE-BEVEL GROOVE 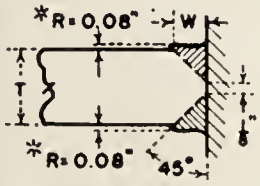 Fig. 15 If underside of top weld is chipped or burned out and welded, add 0.19 lb. to steel required (equivalent to approx. 0.27 lb. thinly coated or 0.34 lb. of heavily coated electrodes).	1/2	0.188	0.17	0.22	0.32	0.39	0.42	0.120	0.78	0.221
	5/8	0.250	0.30	0.38	0.50	0.62	0.756	0.213	1.238	0.350
	3/4	0.313	0.48	0.59	0.72	0.90	1.175	0.332	1.775	0.503
	1	0.438	0.93	1.16	1.27	1.58	2.294	0.648	3.130	0.886
	1 1/4	0.563	1.54	1.92	1.97	2.46	3.790	1.076	4.870	1.38
	1 1/2	0.688	2.30	2.87	2.83	3.54	5.670	1.607	7.00	1.98
	1 3/4	0.813	3.21	4.01	3.83	4.78	7.92	2.245	9.47	2.68
	2	0.938	4.27	5.33	5.00	6.25	10.53	2.985	12.33	3.50

Table 4—Electrode requirements for various types of welds.—Continued.

(Manual Welding)

TYPE OF WELD	INCHES		WEIGHT OF ELECTRODES REQUIRED IN POUNDS PER LINEAR FOOT (Approx)				AMOUNT OF STEEL DEPOSITED PER LINEAR FOOT			
			WITHOUT REINFORCEMENT		*WITH REINFORCEMENT		WITHOUT REINFORCEMENT		*WITH REINFORCEMENT	
	T	W	Bare and Thinly Coated	Heavily Coated	Bare and Thinly Coated	Heavily Coated	Cu. In.	Pounds	Cu. In.	Pounds
"J" GROOVE										
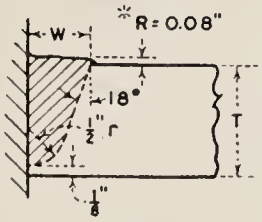	1	0.625	.....	2.55	.....	2.85	5.03	1.43	5.64	1.60
	1¼	0.719	.....	3.64	.....	4.00	7.20	2.04	7.91	2.24
	1½	0.781	.....	4.80	.....	5.15	9.46	2.69	10.20	2.89
	1¾	0.875	.....	6.12	.....	6.55	12.12	3.43	12.95	3.67
Fig. 16	2	0.969	.....	7.40	.....	7.87	14.63	4.15	15.60	4.41
	2¼	1.031	.....	9.00	.....	9.42	17.75	5.03	18.35	5.19
If underside of weld is chipped or burned out and welded, add 0.19 lb. to steel required (equivalent to approx. 0.27 lb. thinly coated or 0.34 lb. of heavily coated electrodes).	2½	1.094	.....	10.60	.....	11.10	20.90	5.92	21.95	6.21
	2¾	1.188	.....	12.30	.....	12.92	24.35	6.90	25.55	7.23
	3	1.281	.....	14.20	.....	14.80	28.10	7.95	29.30	8.29
	3½	1.438	.....	18.40	.....	19.10	36.30	10.30	37.80	10.70
	4	1.594	.....	23.00	.....	23.70	45.40	12.90	47.00	13.30
DOUBLE "J" GROOVE										
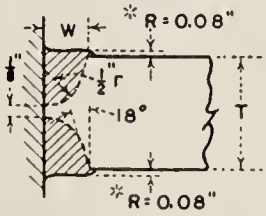	1	0.500	.....	1.87	.....	2.37	3.71	1.05	4.67	1.33
	1¼	0.563	.....	2.48	.....	3.03	4.92	1.39	6.00	1.70
	1½	0.594	.....	3.52	.....	4.08	6.95	1.97	8.10	2.29
	1¾	0.625	.....	4.37	.....	5.00	8.635	2.45	9.83	2.79
Fig. 17	2	0.656	.....	5.47	.....	6.11	10.80	3.06	12.06	3.42
	2¼	0.688	.....	6.55	.....	7.21	12.97	3.67	14.29	4.04
If underside of top weld is chipped or burned out and welded, add 0.19 lb. to steel required (equivalent to approx. 0.27 lb. thinly coated or 0.34 lb. of heavily coated electrodes)	2½	0.750	.....	7.65	.....	8.38	15.12	4.28	16.68	4.69
	2¾	0.781	.....	8.85	.....	9.60	17.52	4.95	19.00	5.38
	3	0.813	.....	10.10	.....	10.85	19.82	5.62	21.45	6.08
	3½	0.906	.....	12.70	.....	13.55	25.05	7.12	26.80	7.58
	4	0.969	.....	15.70	.....	16.60	31.05	8.78	32.80	9.28

CHAPTER III—WELDING CODES AND SPECIFICATIONS

16. Welding Codes.—Welding codes and specifications sponsored by various organizations give rules for the standardization of welding performance and weld tests in connection with the qualification of welding procedures and of welding operators, to be used for structural-steel, machinery, pipe, and pressure-vessel welding. Desgners and welding inspectors should familiarize themselves with these codes, as they crystallize the best current thought on the subject. The codes are subject to revision from time to time to incorporate the latest ideas and developments in the art of welding. The following standard codes and specifications are recommended for various classes of welding:

For Structural Steel—Buildings, Bridges, and Machinery

American Welding Society Code for Fusion Welding and Gas Cutting in Building Construction.

American Welding Society Specifications for Design, Construction, Alteration, and Repair of Highway and Railway Bridges for Fusion Welding.

Navy Department—Bureau of Yards and Docks—Specifications for Structural-Steel Welding.

American Welding Society Code for Fusion Welding and Flame Cutting in Machinery Construction.

For Small Pressure Piping

American Standard Code for Pressure Piping (power, gas, air, oil) sponsored by the American Society of Mechanical Engineers.

American Water Works Association—Standard Specifications for Steel Water Pipe of Sizes up to but not including 30 inches.

For Unfired Pressure Vessels, Pipes, and Tanks

The American Society of Mechanical Engineers—Code for Unfired Pressure Vessels.

American Petroleum Institute and The American Society of Mechanical Engineers—Code for Unfired Pressure Vessels for Petroleum Liquids and Gases.

American Water Works Association—Standard Specifica-

tions for Electric Fusion-Welded Steel Water Pipe of Sizes 30 inches and over.

American Welding Society—Rules for the Fusion Welding of Gravity Tanks, Tank Risers, and Towers.

American Petroleum Institute—Specifications on All-Welded Oil Storage Tanks.

American Water Works Association—Standard Specifications for Elevated Water Tanks, Standpipes, and Reservoirs.

Welding Symbols and Qualifications

American Welding Society—Standard Welding Symbols.

American Welding Society—Standard Qualification Procedure.

American Welding Society—Standard Methods for Mechanical Testing of Welds.

17. Welding Specifications.—Welded construction used by the Bureau of Reclamation is usually based on one of the codes listed in the preceding section. Specifications covering welded work usually follow the applicable code as closely as possible. All departures from the code are clearly defined in the specifications. Stamping the vessel or pipe with the official code symbol is not required. The welding and testing of penstocks and pump discharge pipes which have to withstand heavy surges and water-hammer requires special consideration. All welds in plates exceeding a certain thickness (see section 22) should be subjected to radiographic inspection and the pipe sections stress relieved. If hydrostatic-pressure tests are included for each pipe section, they should be performed after radiographic inspection and stress relieving is completed. The pressure tests will serve as a final check on the soundness of plate and weld, and may disclose cracks undetected by radiographic inspection. Where feasible, the pressure test of individual sections may be replaced with a proof hydrostatic-pressure test applied on the completed pipe line. A test pressure of 150 percent of the operating head, including water-hammer, should be used with this test to check the safety of the entire installation.

Specifications for welded work should include sufficient design details and notes to illustrate the work and describe the fabrication, welding, and testing required, as well as the materials to be used. The code which is to be followed should be designated. Tolerances in dimensions should be clearly defined. If the work is to be performed by two contractors, one supplying the fabricated material for installa-

tion by another contractor, it is particularly important to determine tolerances for the shop work in order to facilitate erection without causing extra work in the field. All work should be carefully inspected in the fabricating plant before shipment to the field.

18. Specifications for Electrodes.—The tentative specifications for "Mild Steel Arc-Welding Electrodes," ASTM designation A 233–48T, cover lightly coated and covered metal-arc-welding electrodes for the welding of carbon and low-alloy steels of weldable quality. The electrodes are classified in table 5 on the basis of physical properties of the deposited weld metal, type of covering, type of current, and welding positions of the electrodes. Any electrode classified under one classification should not be classified under any other classification.

The electrodes may be made by any method that will yield a product conforming to the requirements of these specifications. They should not be required to comply with any limitations on the chemistry of electrode or of deposited metal. The electrodes are made with standard core diameters of 1/16 to 3/8 inch and in standard lengths varying for the different diameters as noted below:

Core diameter, inches:	*Length, inches* [1]
1/16	9 or 18
5/64 and 3/32	12 or 18
1/8 and 5/32	14
3/16	14 or 18
7/32, 1/4, 5/16, and 3/8	18

[1] Electrodes may also be provided in coils or reels.

In order to be classified under these specifications, the electrodes must be capable of yielding results which will meet the requirements of the all-weld-metal tension test, guided-bend test, and the fillet-weld test. For testing electrodes, the steel to be used for the test plates should be of flange or firebox quality, ASTM designation A 285, or "Steel for Bridges and Buildings," ASTM designation A 7.

The abbreviations F, V, OH, and H indicate welding positions as flat, vertical, overhead, and horizontal positions, respectively. H-fillets indicates horizontal fillets. Vertical and overhead welds should be made with electrodes 3/16 inch and under, except in classifications E–6015 and E–6016 for which electrodes 5/32 inch and under should be used.

At the option and expense of the purchaser any or all of the tests described above may be used as a basis for acceptance of

Table 5—Electrode classification and minimum strength requirements for all-weld-metal tension test in the as-welded condition

Electrode classification No.	Type of coating or covering	Capable of producing satisfactory welds in position shown	Tensile strength, minimum pounds per square inch	Yield point, minimum pounds per square inch	Elongation in 2 inches, minimum percent	Type of current
E-4510	Sulcoated or	F, V, OH, H	45,000	Not specified	5	Not specified, but generally d. c., straight polarity (electrode negative).
E-4520	Light coated	H-fillets, F	45,000	Not specified	5	
E-6010	High cellulose sodium	F, V, OH, H	62,000	52,000	22	For use with d. c. reversed polarity (electrode positive) only.
E-6011	High cellulose potassium.	F, V, OH, H	62,000	52,000	22	For use with a. c. or d. c., reversed polarity (electrode positive).
E-6012	High titania sodium	F, V, OH, H	68,000	55,000	17	For use with d. c., straight polarity (electrode negative), or a. c.
E-6013	High titania potassium.	F, V, OH, H	68,000	55,000	17	For use with a. c. or d. c., straight polarity (electrode negative).
E-6015	Low hydrogen sodium	F, V, OH, H	68,000	55,000	22	For use with d. c., reversed polarity (electrode positive) only.
E-6016	Low hydrogen potassium.	F, V, OH, H	68,000	55,000	22	For use with a. c. or d. c., reversed polarity (electrode positive).
E-6020	High iron oxide	H-fillets, F	62,000	52,000	25	For use with d. c., straight polarity (electrode negative) or a. c. for horizontal fillet welds; and d. c., either polarity or a. c., for flat-position welding.
E-6030	High iron oxide	F	62,000	52,000	25	For use with d. c., either polarity, or a. c.

electrodes. Separate tests of electrodes, however, are usually not required as the tests to be made of the deposited weld metal in connection with the process or welder qualifications will provide the necessary information on the quality of the electrodes.

The core wire and coverings should be free of defects which would interfere with uniform performance of the electrodes. The covering should have sufficient electrical resistance to insulate effectively against a difference in potential of 100 volts with a 60-cycle alternating current. Coverings should be of such composition that they do not readily absorb moisture. The covered electrodes for manual welding should be bare of covering for about ¾ inch but not more than 1¼ inches for making contact with the holder. The arc end should be sufficiently bare to permit easy striking of the arc, but the length of this bare portion should not exceed one core-wire diameter or ⅛ inch, whichever is smaller. The diameter of the core wire should not vary more than plus or minus 0.002 inch from the standard size specified, and the covering should be concentric with a maximum variation in the core-plus-one-covering dimension of 3 percent. All electrodes should be color-marked in accordance with the current "Standard for Color Markings for Electrode Identification" of the National Electrical Manufacturer's Association. Electrodes should be packaged as follows:

(a) Bundles or boxes not exceeding 50 pounds net weight, or

(b) Coils or reels not exceeding approximately 200 pounds net weight.

All bundles, boxes, coils, or reels should be legibly marked with (1) classification, (2) manufacturer's name and trade designation, (3) size and net weight, and (4) guarantee.

The manufacturer is required to guarantee that the electrodes in all sizes and classifications conform to the specifications, and each container must be so marked. He is required to replace any electrodes which do not conform to the requirements of the specifications. Care in handling and storing electrodes after receipt is essential. They should be stored in a dry room and, if exposed to moisture, should be dried out before use. Rusted or otherwise damaged electrodes should not be used. The use of electrodes over 7/32 inch in core diameter is generally not recommended. Inspectors should familiarize themselves with the electrodes to be used and their suitability to produce acceptable welds for the work at hand.

CHAPTER IV—WELDING DESIGN

19. General.—Although this manual was prepared primarily for the use of welding inspectors, it will also be of benefit to designers of welded work. Only when based on proper design will welding fulfill its function of efficiently and economically joining metals. In preparing plans for welded work, careful consideration should be given to the service of the structure, the availability of materials and equipment, handling methods, and other local conditions. It is important to specify only materials with good welding qualities so as to insure welds of the required strength and ductility.

Stress analyses will determine the amount of welding required, and construction considerations will dictate the type of joints to be used for certain services. A good design contains the least number of parts and the minimum amount of welding consistent with the stresses in component parts. Rigid joints should be avoided as much as possible in order to prevent cracking during fabrication or in service. Welds should be easily accessible for fabrication, repair, and testing. The positions in which welds are to be made should have the following order of preference: flat, horizontal, vertical, and overhead for fillet welds; and flat, vertical, horizontal, and overhead for groove welds. The size of fillet welds should preferably be held to 5/16 inch or less where possible to facilitate welding in one pass and reduce costs.

A. Steel Pipe

20. Pipe Shell.—Fabricated steel pipes used for irrigation water service are designed to carry a given quantity of water at a velocity which is determined by the available head, while the design of penstocks and pumplines is usually determined by an economic analysis considering the value of power lost in friction and the cost of the pipe. With the diameter determined, the shell thickness is computed by the membrane formula,

$$t = \frac{rp}{se}$$

in which

t=shell thickness, inches
r=inside radius of pipe, inches
p=operating pressure, pounds per square inch
s=design stress, pounds per square inch, and
e=joint efficiency, expressed as a fraction.

Pipes may be fabricated from various types of weldable steel plates For penstocks and pumplines which are subject to water-hammer, firebox-quality steels of ASTM designation A 285, A 201, and A 212 are preferred. For irrigation lines the structural quality steels A 7 and A 283 are satisfactory.

The operating pressure for irrigation pipes is equivalent to the static head, but for penstocks and pump discharge pipes it is equivalent to the static head plus a dynamic head called water-hammer. Pipes should be designed for the total operating head, also for beam loads if self-supporting, for temperature forces if exposed, and for earthquake and wind forces where they prevail. The stresses due to a combination of all applicable loads should not exceed the allowable design stresses given in the code for the various types, qualities, and grades of steels listed. Water-hammer heads are computed from operating characteristics of turbines or pumps. The scope of this manual does not permit a detailed analysis of the subject.

21. Pipe Stiffeners and Supports.—Large pipes are subject to deformation caused by the water load. It is necessary to maintain their circularity with adequate stiffeners. These stiffeners may also serve as supports for pipe erected on concrete piers when the pipe is considered to be a freely supported beam carrying its own weight and the weight of the water. The design of stiffeners and supports is based on complex stress analyses. Ring-girder stiffeners consisting of two circular plates are very efficient and may be placed at long intervals, providing spans up to about 15 pipe diameters without intermediate stiffeners. Plate thicknesses in the span are varied to correspond with the varying pressures and moments occurring along the span. The heaviest plates are generally used over the points of support. For direct support on concrete saddles, double ring girders with or without cover plates over the saddle are welded to the pipe shell. Support columns are welded to the ring girders, on both sides of the pipe, to transmit the load to concrete piers, either directly or by means of slide plates or rockers.

22. Joint Design.—The selection of the type of joint to be used in the fabrication and erection of a pipeline is an important design feature. Longitudinal joints are usually double-welded butt joints or single-welded butt joints with backing strips. Shop girth joints are usually of the same type as the longitudinal joints. Shop-welded joints in straight pipe sections are usually welded under complete procedure control on automatic machines.

Girth joints normally are not as highly stressed as longitudinal joints. Therefore, girth joints having lower efficiencies than required for longitudinal joints may, in most cases, be used. Double-welded butt joints in pressure pipes exceeding a certain thickness (to be specified later) should be radiographed to disclose any welding defects. All objectionable defects should be removed to provide a sound joint. This permits the use of a higher efficiency in the calculations and results in a reduction of the shell thickness. For field-welded girth joints, single- or double-welded butt joints or bell-and-spigot-type joints may be used. The latter joint provides some flexibility in installation and may be tested by soap solution after completion to check the watertightness of the welds. Table 6 gives the maximum joint efficiencies to be used in the design of welded pressure vessels and pipes and the limitations of their uses.

Table 6—Maximum allowable joint deficiencies

Type of welded joint	Limitations	Joint efficiency, percent			
		Basic (as welded)	Radiographed	Stress-relieved	Radiographed and stress-relieved
Double-welded butt joint.	None	80	90	85	95
Single-welded butt joint with backing strip.	Longitudinal joint not over 1¼ inch thick. No thickness limitation on girth joints.	80	90	85	95
Single-welded butt joint without backing strip.	Girth joints only, not over ⅝ inch thick.	70	----------	75	----------
Double full-fillet lap joint.	Longitudinal joints not over ⅜ inch thick. Girth joints not over ⅝ inch thick.	65	----------	70	----------

Radiographic inspection is generally required for penstocks, large pump discharge lines, and long-span pipe crossings. Stress relieving is usually limited to heavy and rigid structures and branch connections or to parts to be machined, such as expansion joints. In general, heavy parts made from carbon and low-alloy steels will benefit by preheating before welding, and by stress relieving after welding. All of these factors should be considered in the design of the joints, and provisions should be made for the inclusion of the tests or heat treatments which are desirable either as a measure of safety or economy in the construction of pressure pipes.

Radiographing and stress relieving and their use for pressure vessels and pipes are governed by section W–318 of the API–ASME Code (1951 edition). Full radiographic inspection is required for all double-welded butt joints where the plate thickness at the joint exceeds 1½ inches. Pipes constructed of high-strength steels, such as those of ASTM designations A 204, A 212, and A 225, should be fully radiographed when the plate thickness at any welded joint exceeds 1 inch.

Stress relieving is required in the following cases:

(a) When the nominal plate thickness exceeds 1¼ inches, and for thinner plates when the thickness at the joint exceeds $\frac{D+50}{120}$, where D is the actual inside diameter of the pipe in inches.

(b) When the thickness at any welded joint exceeds 0.58 inch in pipes constructed of a steel conforming to ASTM designation A 204 or A 225 or any steel having a specified molybdenum content of 0.50 percent nominal with a chromium content not exceeding 0.70 percent.

(c) When the thickness at any welded joint exceeds 1 inch in pipes constructed of steels conforming to ASTM designation A 212, or when required by (a) above.

(Carbon steels of ASTM designations A 7 and A 283 are limited to use in plates not over ¾ inch in thickness.)

Figure 33 shows various types of manually welded field girth joints and edge preparation for pipe. Although the butt joint is the most efficient, the bell-and-spigot joint offers advantages in erection by permitting slight adjustments in length and grade to suit field conditions. On the other hand, the butt joint with outside backing strip makes it possible to weld pipe sections from the inside, which is nec-

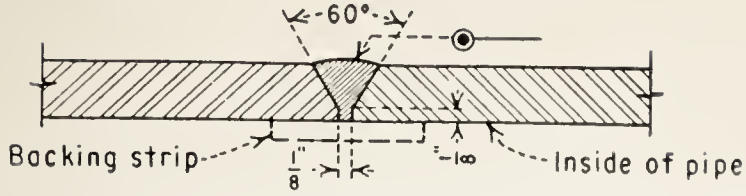

SINGLE-WELDED BUTT JOINT WITH BACKING STRIP
For plates less than 1" thickness

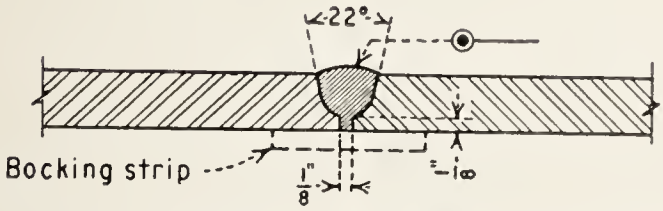

SINGLE-WELDED BUTT JOINT WITH BACKING STRIP
For plates 1" and over
(Where welding must be done from one side)

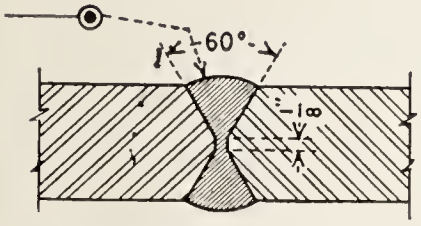

V-Groove for plates
1" to $1\frac{1}{2}$" thick, inclusive

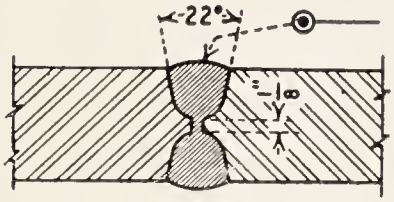

V-Groove for plates
over $1\frac{1}{2}$" thick

DOUBLE-WELDED BUTT JOINTS

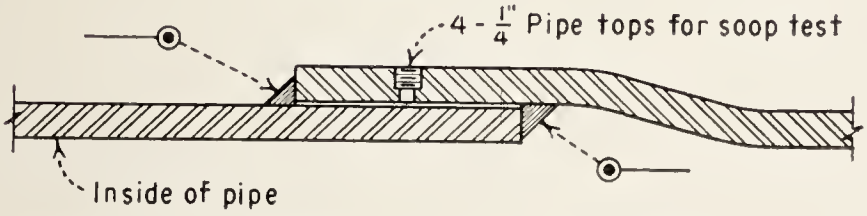

DOUBLE LAP-WELDED BELL AND SPIGOT JOINT
(Adopted for field tests)

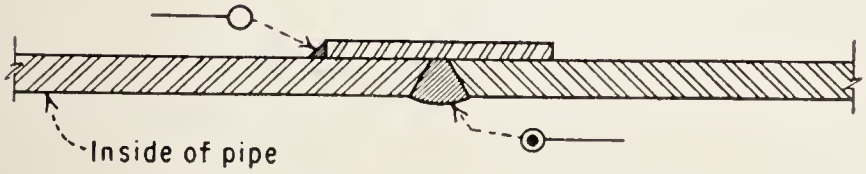

BUTT-WELDED JOINT WITH OUTSIDE BACKING STRIP
(To facilitate welding from inside of pipe)

Figure 33—Typical field girth joints.

essary in tunnels or trenches lacking adequate clearance for outside welding or backing.

The inside surfaces of plates in pipe should be accurately matched to provide streamlined joints. Offsets not exceed- 1/16 inch are usually permissible between adjoining plates and pipe courses. Offsets greater than this amount require tapering the thicker plate as shown in figure 34. Requirements for the taper are given in section 31j. Longitudinal

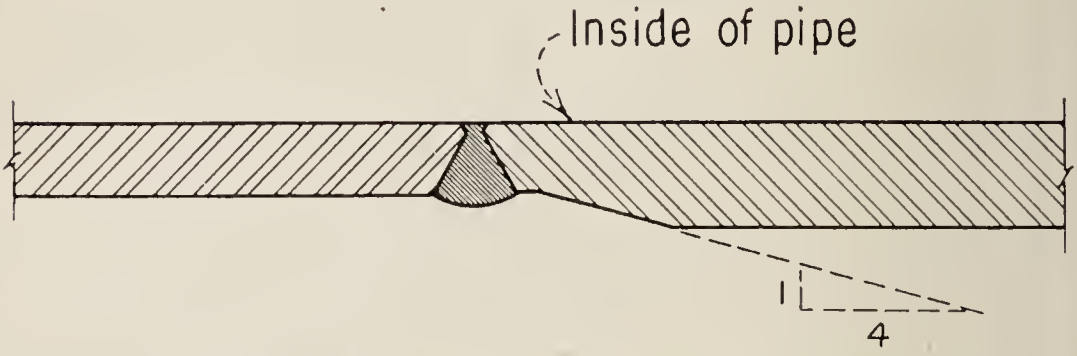

Figure 34—Welding of plates of uneven thickness.

joints in adjoining pipe courses should be staggered at least five times the thickness of the heavier plate. Typical welded joints for attaching dished heads to the end or the inside of pipe are shown in figure 35. The heads may be butt-welded or lap-welded to the ends of the pipe; they may also

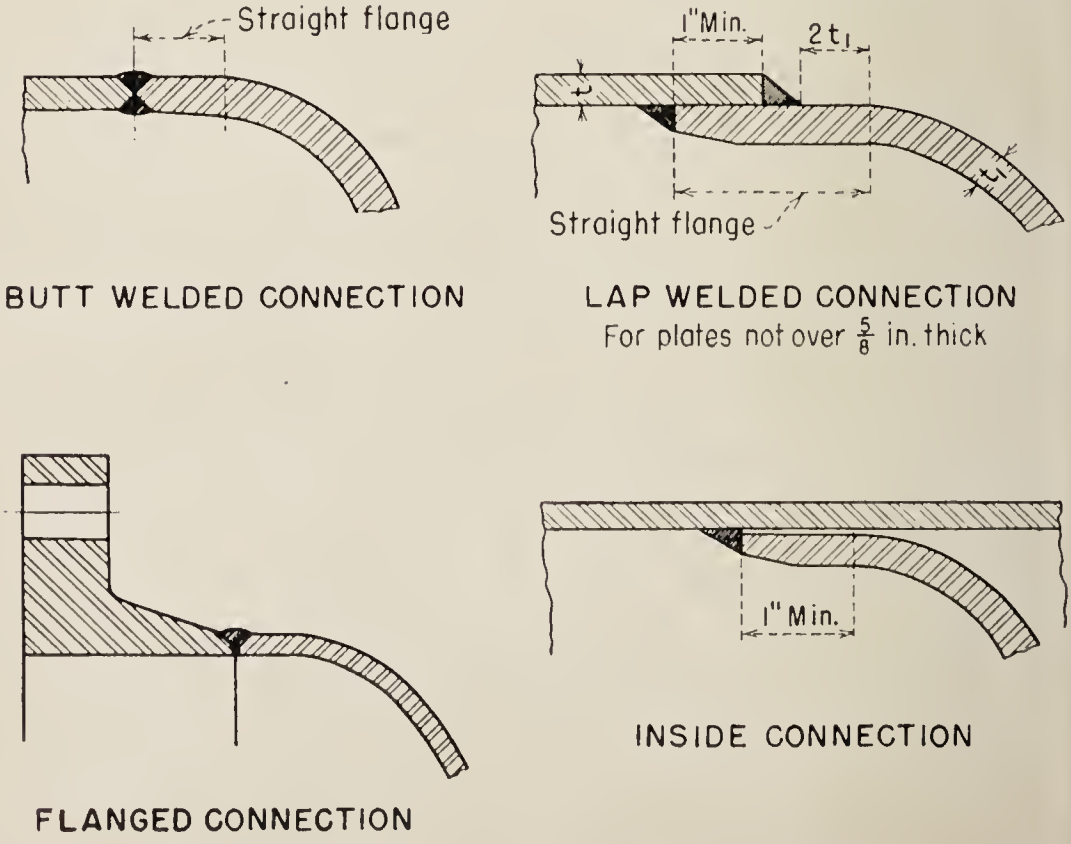

Figure 35—Typical connections for dished heads.

be welded to welding neck flanges to provide bolted connections to valves, or they may be lap-welded to the inside of the pipe. Requirements in the design of dished heads are given in section 31i.

Manual shielded-metal-arc welding may be used for nearly all ferrous and nonferrous metals used in pipes. The number of passes required depends on the wall thickness of the pipe, the welding position, the size of electrode, and the welding current used. In welding carbon and low-alloy steel pipe in the rolled or horizontal position, the passes are usually $\frac{1}{8}$ inch thick. The electrodes used vary from $\frac{1}{8}$ to $\frac{5}{32}$ inch in diameter for the first pass, $\frac{5}{32}$ inch for intermediate passes, and $\frac{3}{16}$ or $\frac{1}{4}$ inch for the top passes and reinforcement.

23. Flanged Connections.—Where bolted flanges are required in a pipeline for making connection to valves, pumps, turbines, or other equipment, several types of flanges may be used. Consideration should be given to the pressure in the line, its size, and the longitudinal force before selecting the type of flange. For high-head pipelines, the forged-steel welding neck flange, which is butt-welded to the pipe, is the most suitable type. The forged-steel slip-on flange is another type which is favored for welded pipelines. These flanges are manufactured in accordance with ASA standards for pressures of 150 pounds per square inch and over. For attachment to lightweight pipe, a light forged-steel flange is available. If the forged- and rolled-steel flanges are not available when required, steel flanges of welding quality and of similar cross section may be used. Ring flanges fabricated from plate or bar stock may be used for pipelines operating under low or medium heads or for pipes where longitudinal forces are small. The American Water Works Association (AWWA) in 1944 published tables showing proportions and drilling templates of ring flanges for working pressures of 75, 125, and 150 pounds per square inch.

Flanges of all types should be finish-faced after welding to the pipe to eliminate distortions due to welding and to insure a watertight connection when bolted to companion flanges. The facing operations can be facilitated by welding the flange to a short section of pipe, say 4 or 5 feet long, before facing. When welding this short flanged section into the line or to a pipe to provide a standard laying length, the welding is performed a sufficient distance away from the flange to eliminate the possibility of distortions in the flange face. The short flanged section, or the standard laying length, may be provided

with some excess length so that it can be trimmed as desired in the field. Slight misalinements between adjoining flanges may thus be corrected without much difficulty. Figure 36 shows typical rolled- and forged-steel flanges of the slip-on, welding neck, and plate types. Slip-on and welding neck

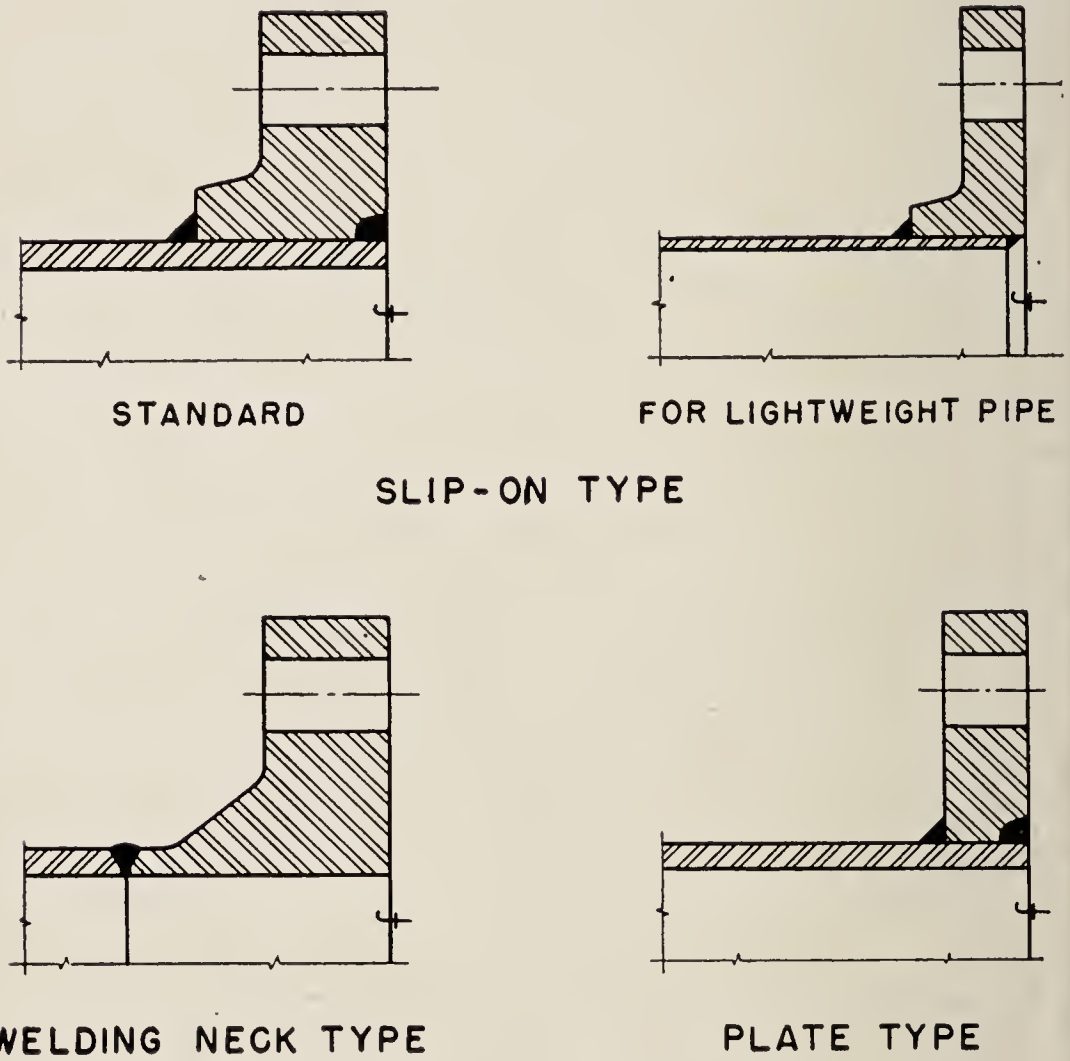

Figure 36—Typical flanged connections.

flanges have been standardized and are available for various pressures and in numerous sizes. The plate type or ring flanges are usually proportioned to suit specific requirements. For low-head pipe, the ring flanges are sometimes used as alternatives when slip-on or welding neck flanges are not available.

B. Steel Tanks

24. Types of Tanks.—A variety of tanks are used at dams and power plants, among which are surge tanks, water and oil storage tanks, and tanks for special purposes. Tanks of welded plate steel construction may be of the gravity or pressure type. All tanks should be designed in sufficient de-

tail to permit showing the required plate thicknesses; appropriate joint construction; the desired inlet, outlet, and drain connections, overflow and vent details, and manhole locations; and the accessories to be furnished. For water tanks located in cold regions, consideration should be given to providing insulating jackets for the tank shell or electric heating units to prevent freezing of the contents. For oil storage tanks, gage glasses may be required.

Elevated water tanks are not ordinarily designed by the Bureau of Reclamation. Diagrammatic sketches are generally prepared for the purchase of such tanks. Each sketch shows an outline of the tank, the support tower, balcony, and the foundation details. The height of the tank, the required water levels, and the accessories to be included are also shown. Design and construction of such tanks is generally based on the AWWA "Standard Specifications for Elevated Water Tanks, Standpipes, and Reservoirs," 7H.1–1948.

Surge tanks are used in connection with power plants and pumping plants for the regulation of flow and the reduction of water-hammer. They are usually located close to the plant, and the height is governed by the anticipated surges resulting from turbine or pump operation, allowing an appropriate freeboard above the maximum surge level. Their design otherwise follows design practices used for elevated tanks except that the designs are carried out in the same detail as those for other water tanks.

25. Tank Shell.—The shell of a gravity tank is proportioned on the basis that the tank is filled with fluid. Shells and heads of pressure tanks are designed for the internal pressure to be maintained in service. Tanks of thin shell supported horizontally on concrete saddles may require internal stiffener rings at the points of support unless supported close to dished ends which provide the required rigidity. For gravity tanks, a minimum shell thickness of ¼ inch and a minimum roof thickness of 3/16 inch should be used. Standard dished heads are generally used at the ends of pressure tanks.

Joints in the tank plates should be of the butt-welded type, using regular 60° V-joints on all seams for welding from the outside except when it becomes necessary to ship the tank knocked down as is the case when large tanks exceed rail clearances. For vertical tanks of such size a single or double V-butt joint, beveled 45° at the top, should be used for the horizontal seams to facilitate welding from the outside during erection. The flat bottoms of large gravity tanks are butt-

welded from the top against backing strips. The thicknesses of the tank shells are computed with the membrane formula $t=\frac{rp}{se}$, the same as for pipe, using a design stress of 25 percent of the specified minimum tensile strength. Steel for bridges and buildings, ASTM designation A 7, is generally used for tanks; however, structural quality steel A 283 or other steels of good welding quality may also be used.

Welds in tanks are not ordinarily inspected by radiographic means. The design of joints and the stresses to be used in plates and welds of oil tanks are discussed in the API Specification on "All-Welded Oil Storage Tanks." For water tanks, the same joint design and stresses are generally used as for pipes. The completed tanks should be tested for leakage with water, oil, or air pressure to suit local conditions. The bottom plates of flat-bottomed tanks should be tested for leakage after the bottom shell courses have been welded in place.

C. Miscellaneous Welded Steelwork

26. Buildings and Bridges.—Welding in building and bridge construction is practically all performed manually as the character of the work offers little opportunity for using automatic welding equipment. In the design of connections, both shop- and field-welded, the accessibility of the joint to the welder should be considered as this will affect the quality of the welds. It is economical to do as much as possible of the assembling and welding work in the shop, where jigs and clamping devices can be used and the work can be placed in the most advantageous position for welding. Until recently, fillet welds were used almost exclusively; however, the use of butt welds is increasing in the fabrication of structural steel. That fillet welds have been preferred up to the present time was due primarily to the fact that close fits in the structure are not as essential for fillet welds as for butt welds. Where considerable stress is to be transferred directly, butt welds will save enough connection material and welding to offset the expense of joint preparation. The loads, forces, and allowable working stresses for the welds are given in applicable codes and standard specifications. Calculations for the proportioning of welds are simplified by expressing weld stresses in terms of pounds per linear inch of weld. In designing bridges and crane girders, fatigue conditions due to repeated loading should be given consideration. Data on the fatigue

strength of welds are, as yet, very meager and need to be augmented by more research. Investigations have shown, however, that butt welds have a much higher fatigue strength than fillet welds. In designing members subjected to severe impact or fatigue loading, it is essential to avoid abrupt surface irregularities that may constitute "notch effects" and cause concentration of high local stresses.

Bridge construction may require the use of butt, fillet, plug, and slot welds. Intermittent butt welds and butt welds welded from one side only are not permissible in bridge construction. Careful design of joints and connections will eliminate many fabrication and erection difficulties. High negative bending moments may be eliminated in simply supported beams by using flexible end connections which can bend or rotate to correspond to the deflection of the beam under load. Figure 37 shows some typical flexible connections between columns and beams which fulfill this purpose. Rigid-frame construction, with its variety of forms and wide range of stresses, calls for a careful analysis of the design of each joint. Figure 38 shows typical joints used in rigid frames.

The material generally used for bridges and buildings is a structural quality steel, ASTM designation A 7, which is of proven weldability. The carbon and manganese contents are limited to a maximum of 0.25 percent and 0.70 percent, respectively. Electrodes used are heavily coated types of the E–6000 series. As it is not feasible to stress relieve welded connections in these structures, the use of structural silicon, structural nickel, and other high-strength steels for bridges is limited at present.

Welded connections should be so designed as to anticipate variations up to the maximum permissible tolerances, as structural shapes will vary from the theoretical handbook dimensions. In cases where assembly and matching of separate members is not feasible, careful checking of the fabricated members is necessary in order to avoid difficulties in erection.

27. Hydraulic Gates and Machinery.—On large gates used for hydraulic control, such as radial gates, drum gates, coaster gates, fixed-wheel gates, and stoney gates, and on machinery, welding is used only for certain parts, while other parts are riveted or are made from castings. Structural quality steel, ASTM designation A 7, is generally used. The use of rolled-steel shapes, pipes, tubes, and bent plates reduces the amount of welding to be done and usually results in a more

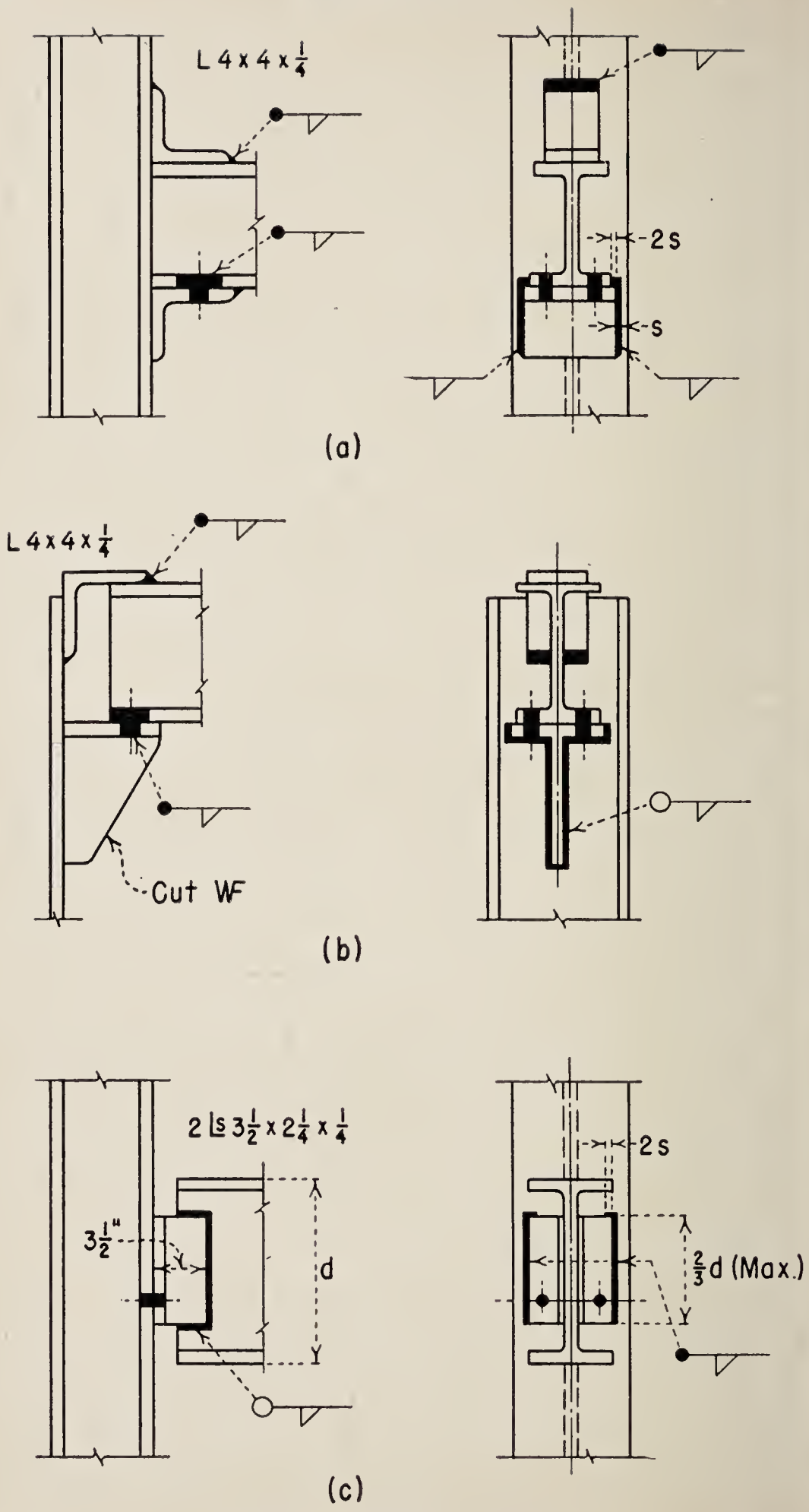

Figure 37—Flexible connections.

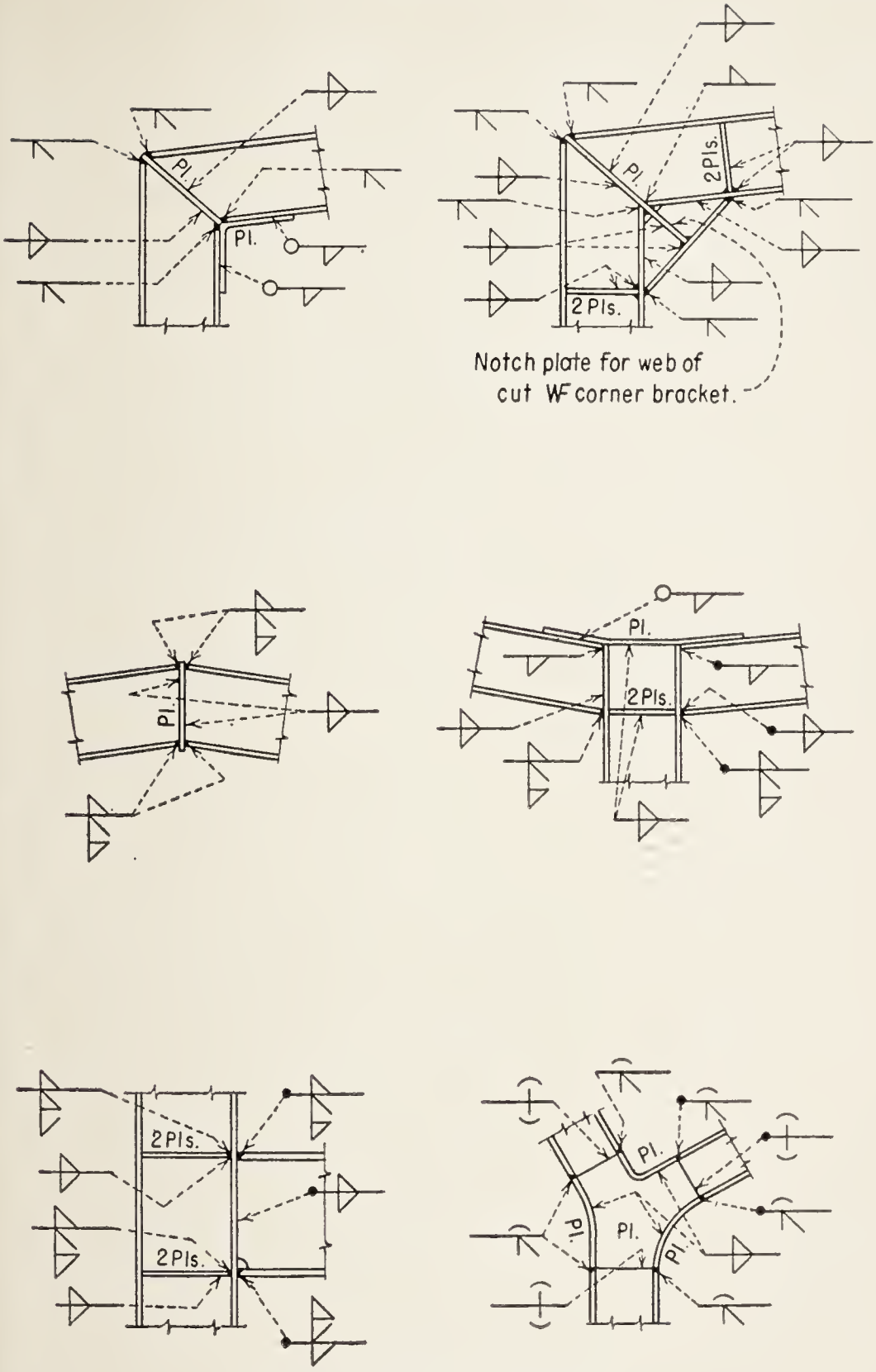

Figure 38—Rigid connections.

economical construction than welding together two or more steel plates to form machine parts. The design should fit the equipment available. Long welds are preferably made on automatic machines, with the aid of a positioner when feasible. In addition to the A 7 structural quality steel, there

are some low-alloy steels available which have good welding qualities, also some nonferrous metals which can be used in the construction of welded machinery. Where deflection requirements are design criteria, the higher strength steels are of little added value as the modulus of elasticity of the various steels is approximately the same. The combined use of steel castings and rolled sections is often economical, especially where considerable welding is saved thereby and multiple sections are to be made.

The design of the various members and the joints between them should be given proper attention. From the standpoint of welding, the joints are the important factor. Joints are made either with groove welds or fillet welds. Stress combinations should be taken into consideration in all designs. Abrupt changes in section should be avoided as much as possible to eliminate undue stress concentrations, especially where fatigue loading is expected. The use of welding fixtures will aid in the welding of machinery by holding parts in alinement during tacking and welding operations and positioning the structure to facilitate welding.

Spiral cases for hydraulic turbines or pumps which cannot be shipped in one piece are usually shop-welded into radial segments with cast-steel or forged-steel welding neck flanges at the ends for bolting together in the field. Segments made from plates of thicknesses not requiring stress relieving may be welded together in the field. Steel plates of firebox quality, ASTM designation A 285, grade B, are generally used. The spiral cases are designed similar to reducing bends for pipes, with plates formed and edges prepared to produce continuous spirals for best hydraulic efficiency. All inner surfaces at flanged joints between segments should be flush. Chipping of the inner surfaces at the joints is permitted to satisfy this requirement. The radial segments with stay ring should be welded together into complete units for field assembly and should be stress-relieved in the shop. Before shipment, the segments should be assembled and bolted together and then match-marked for field assembly and erection. Flanges should be of the full-face type to provide bearing over the entire flange face. Bolts of sufficient size and number should be provided to produce watertight joints.

CHAPTER V—INSPECTION AND CONTROL TESTS

28. Specifications Requirements.—The specifications furnished the contractor by the Bureau of Reclamation may include complete detail drawings or only the general design and arrangement of the material in question. In the latter case, the contractor prepares detail drawings showing the fabrication details for supply (materials) contracts and the fabrication and installation details for combined supply and construction contracts. Generally, the specifications require the contractor to submit his drawings to the contracting officer for approval before proceeding with the work. The approval consists of checking all material to be used, including the principal dimensions and fabrication details. On contracts requiring the contractor to furnish the actual designs (as for elevated tanks) it is also necessary to check design stresses and sizes of members in accordance with loads and unit stresses called for in the specifications. The inspector is provided with copies of the contract specifications, including all change notices, all approved drawings, and correspondence relating to the contract.

The specifications describe the material requirements, the necessary tests and inspections, and the contractor's responsibility in connection with this work. When the design is to be furnished by the contractor, the basic design conditions such as loading, design stresses, and fabrication standards are specified. Manufacturing tolerances are clearly defined, especially if supply and installation are performed under two different contracts.

The quality of a welded joint is dependent not only on the materials and electrodes, but also on the welding procedure used. It is therefore desirable that welding procedures be adopted that will produce welds having the desired physical properties, and that only qualified welders be permitted to perform the welding. Tests to indicate whether or not a contemplated procedure will produce the results desired and tests to determine welders' abilities to apply the procedure have been devised. These tests, or as many of them as are called for in the specifications, should be made before production work is started.

All test plates prepared for the various tests should be of the same material as used in production work and of the thicknesses shown in figures 39 and 40. The preparation of the test plates, the position of welding, and the welding process, procedure, and technique should be the same as those used in the fabrication work.

29. Welding Inspection in General.—General instructions for inspection on Bureau of Reclamation work, including responsibilities of inspectors and their relations to the contracting officer and to the contractor's organization, are given in volume X of the Reclamation Manual. The welding inspector should, for most types of products, follow the general order of fabrication procedure with particular attention to the welding operations. The following items are usually included in the inspection process:

(a) Review of contractor's production organization and facilities.

(b) Interpretation of specifications and drawings.

(c) Qualification of welders.

(d) Inspection of weld preparation and welds.

(e) Interpretation of radiographic films.

(f) Determination of weld repairs.

(g) Review of stress-relieving operations, if any.

(h) Witnessing of all hydrostatic pressure tests.

(i) Inspection of tolerances, assembly, and marking.

(j) Inspection of loading prior to shipment.

(k) Preparation of periodic inspection reports and handling of related correspondence.

Qualifications of welding inspectors and administrative procedures pertaining to qualification tests for welders are discussed in the above Reclamation Manual reference, and the technical procedures are discussed in the following sections.

30. Inspection of Steel Pipe and Tanks.—The inspector should examine the contractor's fabricating and handling equipment and his welding procedure, and should test new welders or examine the qualifications of others before the fabrication work is started. If the contractor intends to use a new process or procedure of welding, it may be desirable to check its adequacy by a welding procedure test unless such test is waived by the contracting officer. The welding of all test plates for the welder and procedure qualification should be witnessed by the inspector. If the test specimens prepared from the test plates for welder's tests are tested by a commercial laboratory in the locality where the inspection is per-

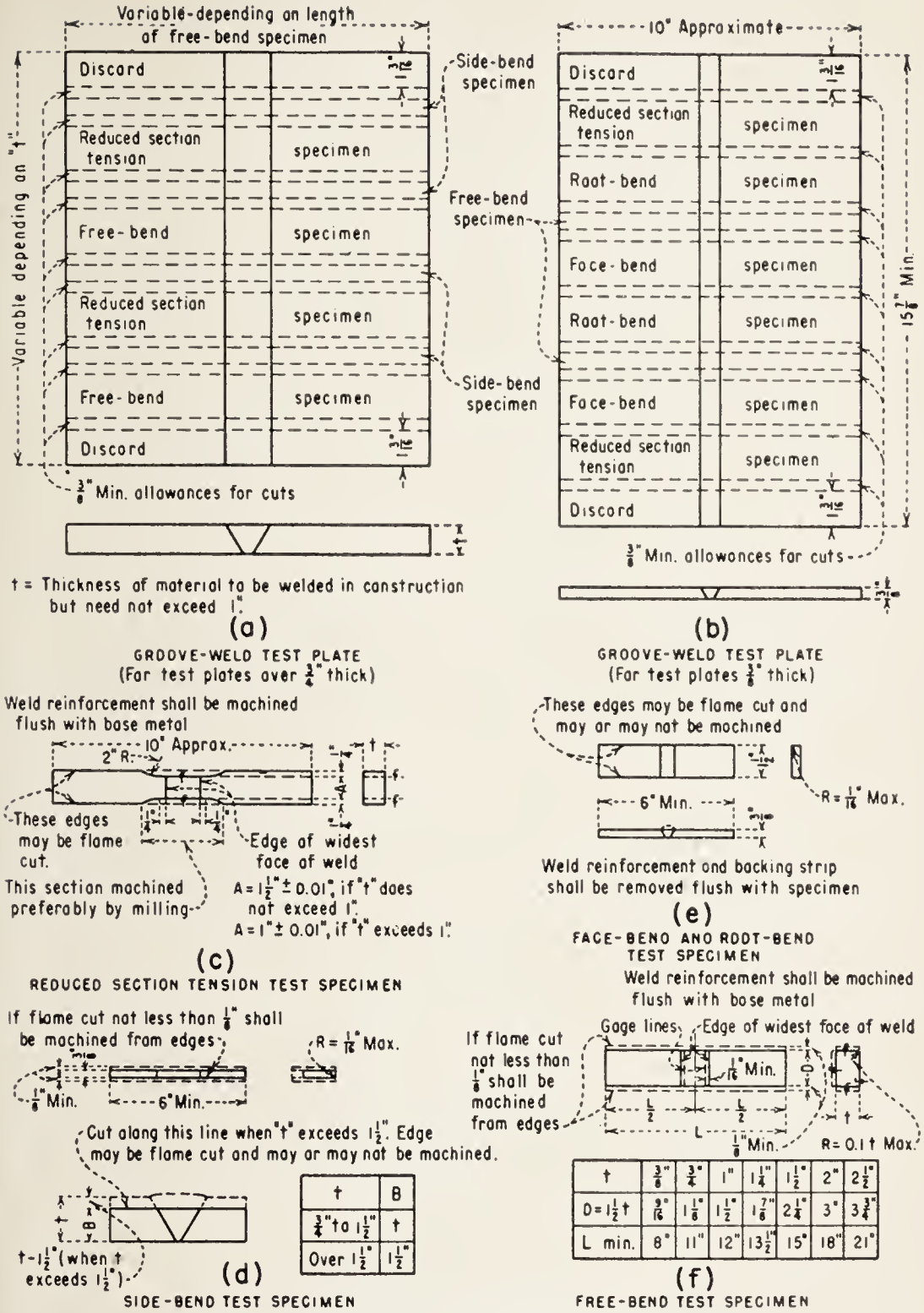

t	B
3/4" to 1 1/2"	t
Over 1 1/2"	1 1/2"

t	3/8"	3/4"	1"	1 1/4"	1 1/2"	2"	2 1/2"
D = 1 1/2 t	9/16"	1 1/8"	1 1/2"	1 7/8"	2 1/4"	3"	3 3/4"
L min.	8"	11"	12"	13 1/2"	15"	18"	21"

TESTS FOR GROOVE WELDS

MAX. THICKNESS TO BE WELDED IN CONSTRUCTION	TEST PLATE THICKNESS	NUMBER AND TYPE OF TESTS REQUIRED				
		REDUCED-SEC. TENSION (C)	FREE-BEND (f)	ROOT-BEND (e)	FACE-BEND (e)	SIDE-BEND (d)
Up to and including 3/4"	3/8"	2	2	2	2	—
Over 3/4"	Maximum but need not exceed 1"	2	2	—	—	4

If a test is made in the maximum or 1" thickness, no test need be made in the 3/8" thickness.

Figure 39—Welding procedure tests for groove welds.

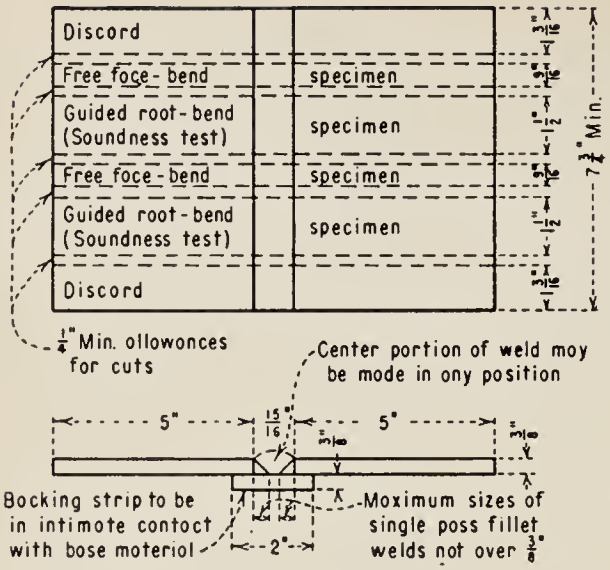

(a)

FILLET-WELD TEST PLATE

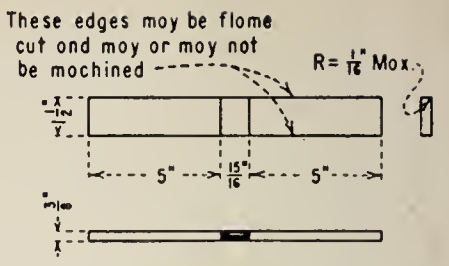

Weld reinforcement and backing strip shall be removed flush with the base metal. Flame cutting may be used for the removal of the major portion of the backing strip, provided at least 1/8" of its thickness is left to be removed by machining or grinding.

(b)

FILLET-WELD SOUNDNESS TEST SPECIMEN
(Two tests required)

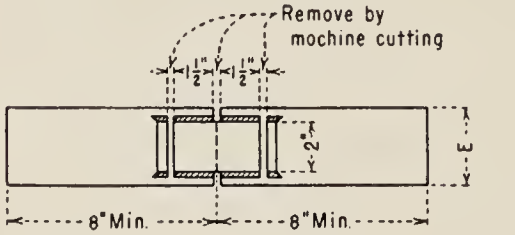

Size of weld "F"	1/8"	1/4"	3/8"	1/2"
Thickness "H" min.	3/8"	1/2"	3/4"	1"
Thickness "G"	3/8"	3/4"	1"	1 1/4"
Width "E"	3"	3"	3"	3 1/2"

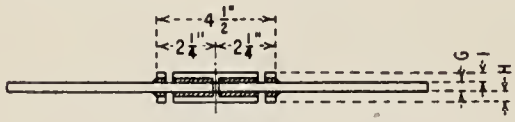

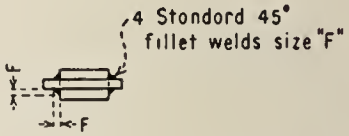

(c)

LONGITUDINAL FILLET WELD SHEARING SPECIMEN
(Two tests required)

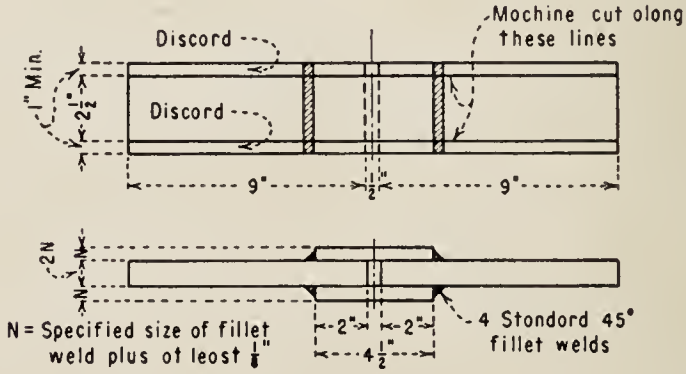

(d)

TRANSVERSE FILLET-WELD SHEARING SPECIMEN
(Two tests required)

NOTES The test plate material shall conform to the specifications for the material in the structure to be welded. The test plates or specimens shall not be stress-relieved.

If test specimens are machined, any tool marks remaining must be lengthwise of the specimens.

Figure 40—Welding procedure tests for fillet welds.

formed, the actual tests should be witnessed by the inspector or certified copies of the test results should be obtained from the laboratory. If specimens are tested in the central Bureau laboratories, the presence of the inspector is not required during the tests. If proper facilities are lacking at the project for the preparation of test specimens they may be prepared at the place of testing.

When welds in pipes are subject to radiographic inspection, all radiographic inspection should be closely followed by the inspector, each radiograph examined for weld defects, and all unacceptable defects marked for removal and repair. Radiographs of repaired portions of welds should be examined to check the adequacy of the repair welds. When the specifications call for preheating or stress relieving of the work, the inspector must make sure that the proper temperatures are used or maintained for the required length of time.

A dimensional check of all completed work should be made by the inspector. Parts or assemblies which do not meet the tolerance requirements called for in the specifications may be rejected.

The inspector should witness all hydrostatic pressure tests of completed pipe sections or of complete installations, and follow up all cleaning and coating work. Loading of completed work for shipment should be reviewed to ascertain that the material has been properly loaded and securely blocked on the cars. Internal braces in pipe sections must be of proper size and secured in place in such a manner as to prevent shifting.

31. Tolerances for Steel Pipe.—Decision as to the acceptability of fabricated pipe will be facilitated if tolerances are specified for some details affecting field assembly, installation, and the hydraulic efficiency of the pipe. Among such details those listed below are considered to be the most important, and the desired tolerances are given. Unless other tolerances are called for in the specifications, these should govern.

(*a*) *Over-all Length of Pipe Sections.*—The permissible variation from nominal length is as follows:

For sections 20 feet to 30 feet long, plus or minus 3/16 inch.

For sections 30 feet to 40 feet long, plus or minus 1/4 inch.

Pipe sections of deficient length should be compensated for by sections of excess length, so that the measured length of two adjoining sections will not deviate more than 1/4 inch from the theoretical laying length. The specifications usually provide that pipe sections should be made to the full laying

length, disregarding the widths of the weld gaps in field joints. Plates should be ordered from the mill with an excess length for trimming and edge preparation to meet the requirement for net lengths of completed pipe sections. Extra allowance is required if sections are to be welded together for hydrostatic testing and later cut apart and retrimmed.

(*b*) *Spacing of Support Rings.*—Using tolerances as given for the pipe sections, the support rings should be placed at the design stations. The following tolerances are satisfactory in support spacing:

For spans up to 60 feet inclusive, plus or minus $\frac{3}{8}$ inch.

For spans over 60 feet and up to 100 feet inclusive, plus or minus $\frac{1}{2}$ inch.

(*c*) *Continuity of Adjoining Plates in Pipe Courses and Pipe Sections.*—The maximum offset in inner surfaces of adjoining plates and sections should not exceed $\frac{1}{16}$ inch for pipes 15 feet or less in diameter, permitting a maximum difference in diameter between adjoining pipe courses and sections of $\frac{1}{8}$ inch and in circumference of $\frac{3}{8}$ inch. For pipes over 15 feet in diameter, offsets of $\frac{3}{32}$ inch with corresponding differences in diameter are permissible.

(*d*) *Trueness of Ends of Pipe Sections to be Butt-Welded or Provided with Flanges.*—The maximum deviation at the outer radius of the pipe or flange from a plane normal to axis of pipe should be as follows:

For pipe up to and including 15 feet in diameter, $\frac{1}{16}$ inch.

For pipe over 15 feet in diameter, $\frac{3}{32}$ inch.

(*e*) *Clearances in Bell-and-Spigot-Type Field Girth Joints.*—The inside diameter of the bell end of the pipe should exceed the outside diameter of the spigot end by not less than $\frac{1}{16}$ inch and not more than $\frac{1}{8}$ inch, which provides a tolerance of $\frac{3}{16}$ inch to $\frac{3}{8}$ inch in circumference.

(*f*) *Clearances in Expansion Joints.*—In order to provide a free sliding fit between sleeves and between sleeves and seat rings or packing glands, expansion joints should be made with a minimum clearance of $\frac{1}{32}$ inch and a maximum clearance of $\frac{1}{16}$ inch between all sliding surfaces. This provides a tolerance from $\frac{1}{16}$ inch to $\frac{1}{8}$ inch on the diameter and from $\frac{3}{16}$ inch to $\frac{3}{8}$ inch on the circumference of contact surfaces.

(*g*) *Out-of Roundness of Pipe Shells.*—Differences between the maximum and minimum diameters at any cross section along the length of the pipe section should not exceed 1 percent of the nominal diameter of the section. Completed pipe sections should be kept circular during fabrication and ship-

ment with adequate internal spiders or cross braces of steel or wood. The braces should be properly fastened to the pipe to prevent loosening during handling and transportation.

(*h*) *Tolerances for Underground Pipe Lines.*—Long pipelines buried in the ground usually are not provided with expansion joints which would permit adjustments in length to suit ground profiles. Therefore, a closing or makeup section should be provided for each tangent length of pipe. Preferably, the makeup sections should be short lengths provided with an excess of 6 to 12 inches for trimming in the field to take care of discrepancies. As the makeup sections are the last to be installed in a tangent length, they should preferably be located at the higher end of a sloping section to facilitate installation. As an alternative, closing sections may be made to exact measurements taken at the site after all pipe sections except the closing section have been installed and a mean pipe temperature obtained.

(*i*) *Dished Heads.*—The thickness of heads given in the specifications is the minimum required. A plate of sufficient thickness should be used in the manufacture of dished heads to allow for thinning out during forming operations without reducing the specified thicknesses. Differences between maximum and minimum diameters of heads should not exceed 1 percent of the nominal diameter, and should in no case exceed ¾ inch.

(*j*) *Matching Plates of Unequal Thickness.*—When the thicknesses of two adjoining plates differ by more than ⅛ inch, the thicker plate should be trimmed to a smooth taper for a minimum distance of four times the offset, before welding. The tapering should be done on the outside of the pipe to preserve a uniform diameter on the inside. (See fig. 34.)

(*k*) *Weld Reinforcement.*—The deposited weld metal should be built up as reinforcement on each side of the plate. In general, the projection of the reinforcement at the center of the weld may be as much as one-tenth of the plate thickness but should not be less than 1/16 inch nor more than 3/16 inch. For plates less than ¼ inch thick the projection need not be more than one-fourth the plate thickness. If the maximum allowances are exceeded, it may be required that the reinforcement be chipped, ground, or machined off, especially for radiographed joints in order to improve the clarity of the radiographs.

32. Inspection of Structural Steelwork.—Inspection of structural steelwork for buildings, bridges, gates, machinery, etc., is of

necessity entirely visual as nondestructive tests have not been found feasible for this type of work. The inspection consists of gaging for dimensions and surface contour of the structure; checking specified tolerances; and examining for undercutting, overlap, slag inclusion, and incipient cracks in welds. In addition, the inspector should review the welding procedure used and examine the qualifications of welders or qualify the welders in accordance with the applicable qualification tests. The work of each welder should be observed through a shield to determine that each maintains a clean pool and obtains good penetration at the root of the weld.

Reliability of welding structural joints in bridges is predicated upon the establishing of suitable construction and welding procedures, the qualification of welders, and adherence to established procedures and the general workmanship requirements of the specifications. The suitability of welding procedures is established by determining that they conform to standard practices as outlined in the specifications, or to the special requirements of any new or nonstandard procedures.

If it is desired to supplement visual inspection with the occasional use of some method of spot checking of welds (as for important butt welds in heavy material) several methods are available. These are X-ray or gamma-ray, magnetic power testing, and probing or trepanning. The random use of such methods should be deemed a part of the general system of control over the construction rather than a proof testing method. Unless the inspector has a good reason to suspect the presence of serious defects, he should not require indiscriminate use of probing, trepanning, chipping, or gouging to reveal possible defects in welds.

33. Welding Procedure Tests.—This series of tests requires the preparation of some or all of the test specimens shown in figures 39, 40, and 41 and the testing of the appropriate specimens as outlined in the description of the test procedure below. Figure 39 shows the number and type of tests required for groove welds in plates up to and including ¾ inch in thickness and for plates over ¾ inch in thickness. Figure 40 shows the number and type of tests required for various types of fillet welds. Figure 41 shows the welding positions for both groove welds and fillet welds; also the edge preparation for groove welds and bend test methods. The discussion which follows covers the applicable portions of standard qualification procedures approved by the American Welding Society on April 25, 1941.

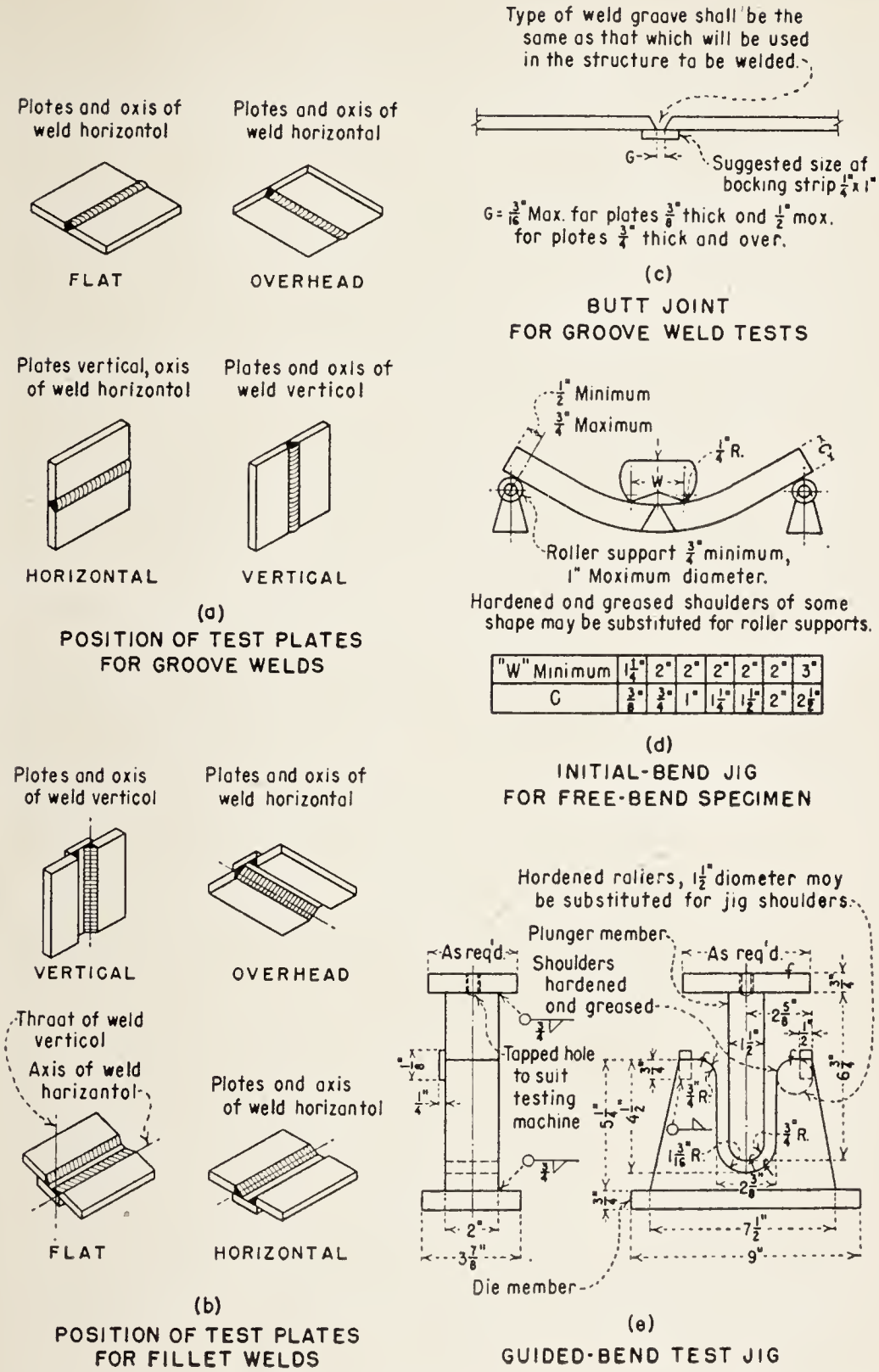

Figure 41—Welding procedure tests—Welding positions, weld preparation and bend tests.

Welding procedure tests shall be made when the contractor proposes to use a new welding process or procedure, the adequacy of which has not been fully established. Such tests shall also be made when it is desirable to check a contractor's experience and ability to perform satisfactory welding of the

type called for in the specifications. In these cases, the proposed welding procedure or process shall be tested, using material of the same type and thickness as will be used in production welding.

Test plates are required only for the types of welds that will be used in production welding. All test plates shall be welded by means of the same technique and equipment and the same sizes and types of welding electrodes that will be used during production. The test plates shall be welded in the positions in which production welding will be performed. (See fig. 41 (a) and (b).)

All test plates shall be welded in the presence of the inspector, and production welding shall not be performed until the specimens have been tested and the requirements stated below have been met.

(*a*) *Number of Test Welds Required:*

(*1*) *Groove welds.*—See table in figure 39.

(*2*) *Fillet welds.*—Two longitudinal or two transverse shear test welds shall be made. For each type of test weld, one shall be made with the maximum-size, single-pass fillet weld and one with the minimum-size, multiple-pass fillet weld that will be used in production welding; in addition, one test weld for the free-bend and fillet-weld-soundness tests shall be made with the maximum-size single-phase fillet weld (not over ⅜ inch) that will be used in production welding.

(*b*) *Method of Testing Specimens:*

(*1*) *Reduced-section tension specimen.*—Before testing, the least width and corresponding thickness of the reduced section shall be measured in inches. The specimen shall then be ruptured under tensile load and the maximum load in pounds shall be determined. The cross-sectional area shall be obtained by multiplying the width by the thickness. The tensile strength in pounds per square inch shall be obtained by dividing the maximum load by the cross-sectional area.

(*2*) *Free-bend test specimen.*—The gage lines indicated in figure 39 (f) shall be lightly scribed on the face of the weld. The gage length (distance between gage lines) shall be approximately ⅛ inch less than the width of the face of the weld and shall be measured in inches to the nearest 0.01 inch.

Each specimen may be bent initially by the use of a fixture complying with the requirements of figure 41 (d).

The surface of the specimen containing the gage lines shall be directed toward the supports. The weld shall be midway between the supports, and the loading block and the initial bend shall be symmetrical with respect to the weld with both ends bent through the same angle. The guided-bend test jig shown in figure 41 (e) may also be used to make the initial bend. After the initial bend has been made, compressive forces shall be applied continuously to the ends of the specimen decreasing the distance between the ends. (Any convenient means such as a vise or a testing machine may be used for making the final bend.) When a crack or other open defect exceeding 1/16 inch in any direction appears on the convex face of the specimen, the load shall immediately be removed. If no crack appears the specimen shall be bent double. Cracks occurring on the corners of the specimen during testing shall not be considered.

The elongation shall be determined by measuring the minimum distance between the gage lines, along the convex surface of the weld, to the nearest 0.01 inch and subtracting the initial gage length. The percent elongation shall be obtained by dividing the elongation by the initial gage length and multiplying by 100.

(*3*) *Root-, face-, side-bend and fillet-weld-soundness test specimens.*—Each specimen shall be bent in a fixture complying with the requirements of figure 41 (e). Any convenient means may be used for moving the plunger member with relation to the die member of the jig.

The specimens shall be placed on the die member of the jig with the weld at midspan. Face-bend specimens shall be placed with the face of the weld directed toward the gap; root-bend and fillet-weld-soundness specimens shall be placed with the root of the weld directed toward the gap; side-bend specimens shall be placed with that side showing the greater defects, if any, directed toward the gap. The two members of the jig shall be forced together until the curvature of the specimen is such that a 1/32-inch diameter wire cannot be passed between the curved portion of the plunger member and the specimen. The specimen shall then be removed from the jig.

(*4*) *Longitudinal and transverse shear test specimens.*—Before testing, the length of the individual welds shall be measured in inches and if any weld varies by more than 1/16 inch from the length specified in figure 40 (c) and (d),

the length of each weld and its location shall be recorded. The average size of the fillet welds shall also be recorded. The specimen shall then be ruptured under tensile load and the maximum load in pounds shall be determined. The shearing strength of the welds in pounds per linear inch shall be obtained by dividing the maximum force by the sum of the lengths of the welds which ruptured. The shearing strength of the welds in pounds per square inch shall be obtained by dividing the shearing strength in pounds per linear inch by the average theoretical throat dimension of the welds by inches.

(*c*) *Test Results Required:*

(*1*) *Reduced-section tension test.*—The tensile strength shall not be less than 100 percent of the minimum of the specified tensile range of the base material.

(*2*) *Free-bend tests.*—The elongation shall not be less than 25 percent.

(*3*) *Root-, face-, side-bend, and fillet-weld-soundness tests.*—Any specimen in which a crack or other open defect exceeding ⅛ inch measured in any direction is present after bending shall be considered as having failed. Cracks occurring on the corners during testing shall not be considered.

(*4*) *Longitudinal or transverse shear test.*—For the longitudinal shear test the shearing strength of the welds in pounds per square inch shall not be less than two-thirds of the minimum of the specified tensile range of the base material. For the transverse shear test the shearing strength of the welds in pounds per square inch shall be not less than seven-eighths of the minimum of the specified tensile range of the base material.

(*d*) *Records.*—Records of the test results shall be kept by the contractor and shall be made available to those authorized to examine them.

34. Tests of Welders.—This series of tests applies to both manual and machine welders, and requires the preparation of some or all of the test specimens shown in figures 42 and 43 and the testing of the appropriate specimens as outlined herein. The discussion covers the applicable portions of standard qualification procedures approved by the American Welding Society on April 25, 1941.

(*a*) *Test Procedure.*—The tests specified herein shall be used to qualify manual welders and operators of automatic welding equipment.

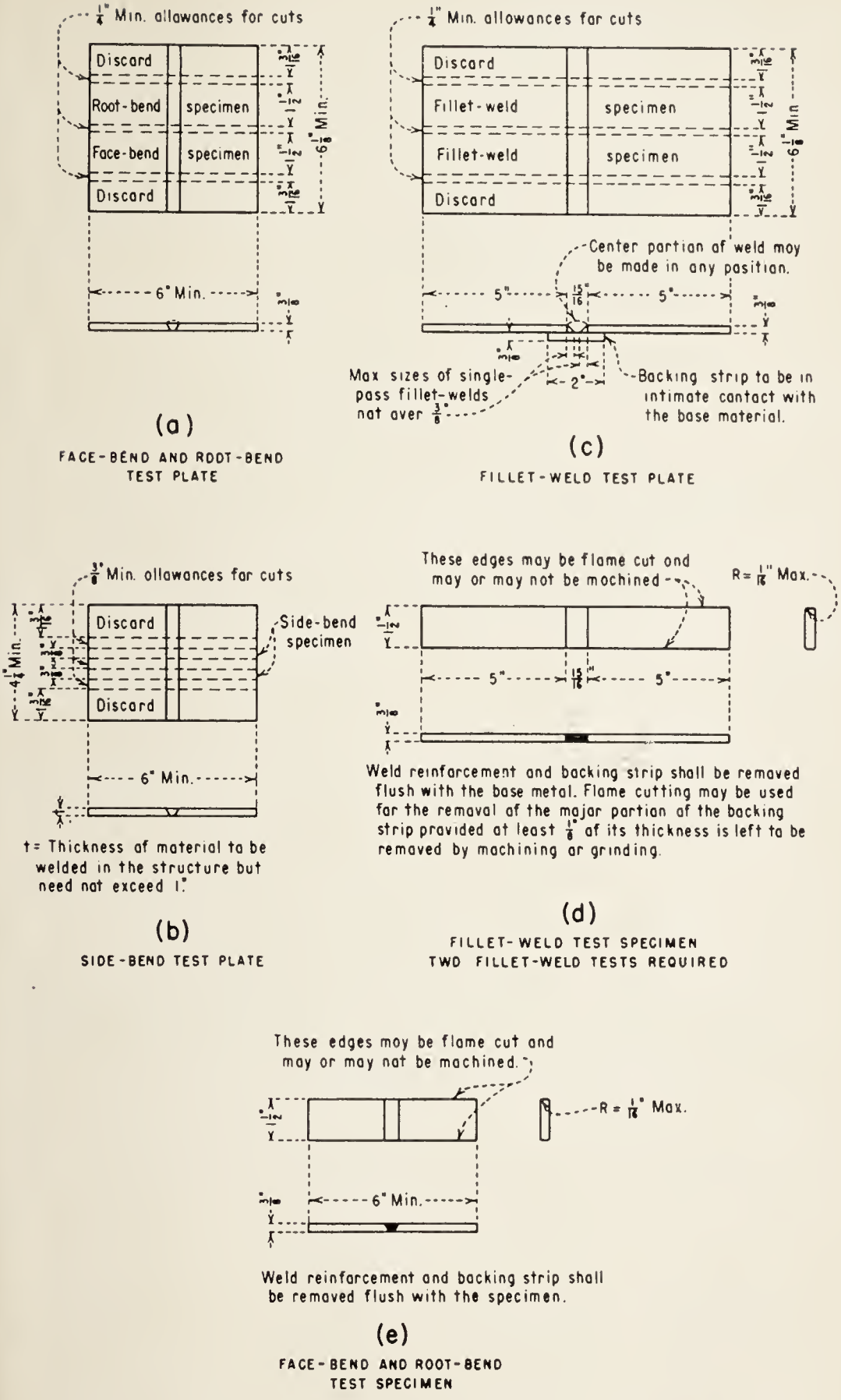

Figure 42—Welder's qualification tests—Test plates and specimens.

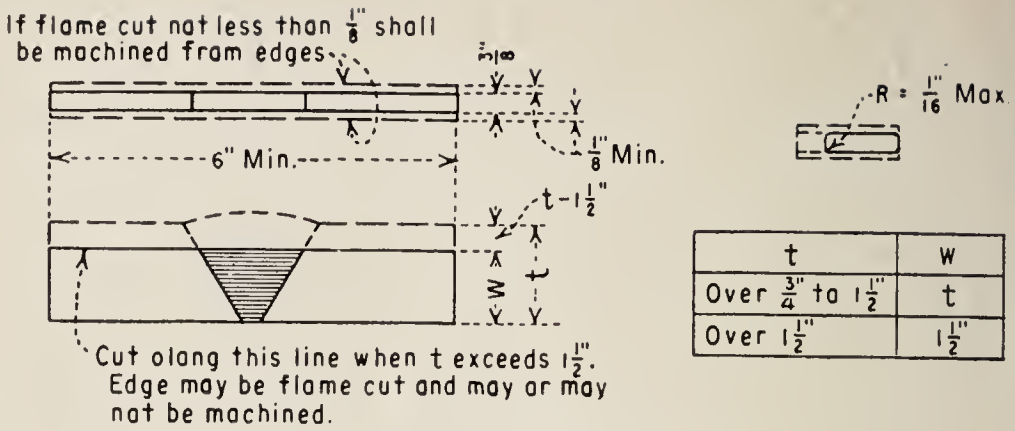

t	W
Over 3/4" to 1 1/2"	t
Over 1 1/2"	1 1/2"

(a)
SIDE BEND TEST SPECIMEN

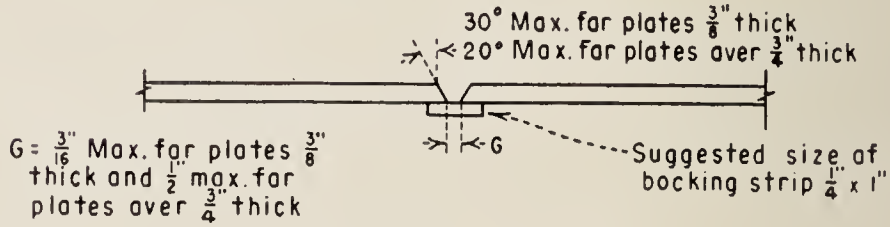

(b)
BUTT JOINT FOR GROOVE - WELD TEST

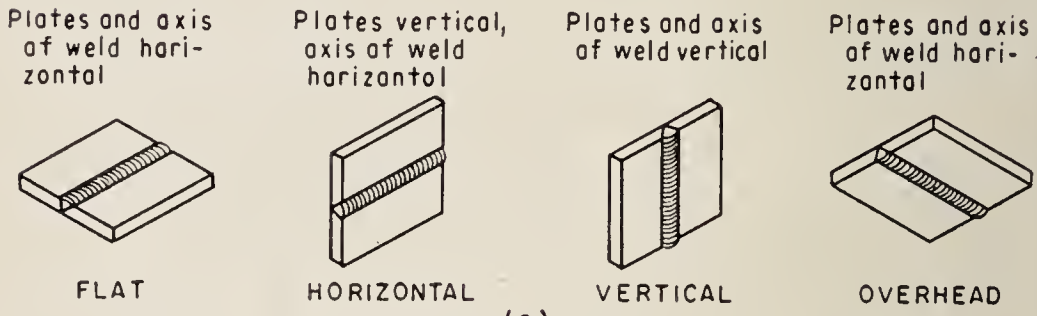

(c)
POSITION OF TEST PLATES FOR GROOVE WELDS

TESTS FOR GROOVE WELDS

MAXIMUM THICKNESS FOR WHICH WELDER IS TO BE QUALIFIED	THICKNESS OF MATERIAL FOR TEST WELD	NO. AND TYPE OF TESTS REQUIRED		
		ROOT-BEND SEE FIG.(e)	FACE-BEND SEE FIG.(e)	SIDE-BEND SEE FIG(a)
Up to and including 3/4"	3/8"	1	1	–
Over 3/4"	Max. but need not exceed 1"	–	–	2

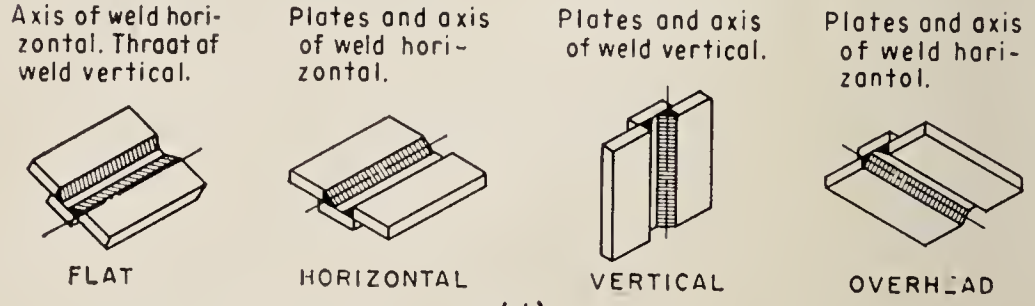

(d)
POSITION OF TEST PLATES FOR FILLET WELDS

Figure 43—Welder's qualification tests—Test specimens and welding positions.

Test plates are required only for the types of welds that will be used in production, and the test plate material shall conform to the specifications for the material that will be used in the structure. All test plates shall be welded by means of the same technique and equipment and using the same sizes and types of welding electrode that will be used in production welding. The test plates shall be welded in the positions in which the operator will be required to perform production welding. (The Bureau of Reclamation further requires that test plates or specimens shall not be stress-relieved and, if test specimens are machined, any tool marks remaining must be lengthwise of the specimen.) Figure 43 shows the number of test specimens of each type required for various plate thicknesses.

For groove welds, qualification in the horizontal, vertical, or overhead position shall be considered as qualification in the flat position. (See fig. 43 (c).) For fillet welds, qualification in the horizontal position shall be considered as qualification in the flat position; and qualification in the vertical or overhead position shall be considered as qualification in the flat and horizontal positions. (See fig. 43 (d).)

The test plates shall be welded in the presence of the inspector, and the welder shall not be permitted to perform production welding until the specimens have been tested and the requirements stated below have been met.

(*b*) *Method of Testing Specimens.*—Each specimen shall be bent in a jig made substantially in accordance with figure 41 (e). Any convenient means may be used for moving the plunger member of the jig with relation to the die member of the jig. The specimen shall be placed on the die member of the jig with the weld at midspan.

Face-bend specimens shall be placed with the face of the weld directed toward the gap; root-bend and fillet-weld specimens shall be placed with the root of the weld directed toward the gap; and side-bend specimens shall be placed with that side showing the greater defects, if any, directed toward the gap.

The two members of the jig shall be forced together until the curvature of the specimen is such that a $\frac{1}{32}$-inch diameter wire cannot be passed between the curved portion of the plunger member of the jig and the specimen. The specimen shall then be removed from the jig.

(*c*) *Test Results Required.*—The convex surface of the specimen shall be examined for the appearance of cracks or other

open defects. Any speciment in which a crack or other open defect exceeding ⅛ inch measured in any direction is present after bending shall be considered as having failed. Cracks occurring on the corners of the specimen during testing shall not be considered .

(*d*) *Retests.*—If one or more test welds fail to meet the requirements, an immediate retest consisting of two test welds of each type failing to meet the requirements may be made. In each of these test welds the requirements must be met. A welder failing to qualify in the initial test or immediate retest may be retested after further training or practice, in which case a complete set of test welds shall be made.

(*e*) *Period of Effectiveness.*—The welder-qualification tests herein described shall be considered as remaining in effect indefinitely unless the welder has not engaged in the arc welding process for which he is qualified for a period of three months or more, or unless there is some specific reason to question the welder's ability. In the former case the requalification test need be made only for the ⅜-inch thickness.

(*f*) *Records.*—Copies of the records for qualified welders shall be kept by the manufacturer or contractor and they shall be made available to those authorized to examine them.

35. Records of Welders' Tests.—The Bureau of Reclamation requires its inspectors to maintain a record of all welders' qualification and requalification tests performed for the work at hand. The records should show the dates of the tests, the type of joint and welding positions qualified for, and the results of the tests, as indicated in figure 44.

36. Welders' Certificates.—The Bureau of Reclamation issues a certificate to welders on pressure vessel work who have satisfactorily passed the required qualification tests. The certificate gives all essential information on the qualification and requalification tests, and includes a record of employment and identification; also the code or drawing under which the

Employment Record

From	To	Employed by	Signature of supervisor	Remarks

operator was qualified, the position of welding, class of material, type of joint, etc. Certificates are printed in pocket-size form to facilitate handling. The data included in the certificate are shown in figure 45.

Identification Record

Date	Location	Welder's signature

PHOTOGRAPH	THUMB PRINT

NOTICE

This certificate remains valid contingent upon requalification tests to be made annually and whenever required by the Inspector, and continuance of welder's work and conduct to the satisfaction of the Bureau of Reclamation.

Information of all qualification and requalification tests will be kept on file at the Division of Design and Construction, Denver, for record purposes.

Figure 44—Welder's employment record and identification.

Welder's Qualification Test

Based on .....
(Code or drawing under which qualified)
Employed by .....
Location ..... Date of test .....
Type of joint ..... Welding process .....
Position of welding .....
Class of material ..... Thickness of test plate .....
Size of electrode ..... Type of electrode .....
Number of beads ..... Appearance of weld .....
This is to certify that .....
has successfully passed the above qualification test.

....
Inspector Approved

Requalification Tests

Test No.	Date	Location	Welding process	Material welded	Position of welding	Approved
1						
2						
3						

Figure 45—Welder's certificate.

The certificate facilitates the transfer of welders from one reclamation project to another without the necessity of requalification for each different assignment. Records of all qualification and requalification tests and records of employment are kept on file in the Design and Construction Division, Denver, for use in case of transfer of welding operators between projects or their employment by other Government agencies.

37. Radiographic Inspection.—Before the joints are radiographed, a careful visual inspection should be made of the welds, and all unacceptable surface defects such as undercuts and cracks should be marked for correction. Prior to radiographing, the joints should be prepared as follows: The weld ripples or weld surface irregularities, on both sides of the joint, should be removed by any suitable mechanical process to such a degree that the radiographic contrast due to any remaining irregularities will not mask or be confused with that of any objectionable defect. Also, the weld surface should merge smoothly into the plate surface. The finished surface of the reinforcement may be flush with the plate or have a reasonably uniform crown not to exceed $\frac{1}{16}$ inch for plates $\frac{1}{2}$ inch and less in thickness, $\frac{3}{32}$ inch for plates over $\frac{1}{2}$ inch to 1 inch inclusive in thickness, and $\frac{1}{8}$ inch for plates over 1 inch in thickness. If backing strips are used, they need not be removed unless their presence interferes with interpretation of the radiographs.

The radiographs may be produced by means of either X-rays or gamma rays, but the technique used must be such that it will permit the determination quantitatively of the sizes of defects with thicknesses equal to or greater than 2 percent of the thickness of the weld. Slight defects can be detected more distinctly with X-rays than with gamma rays; thickness differences of 1 percent can be detected with a properly adjusted X-ray tube in steel less than 2 inches thick. Therefore, the X-ray technique is generally favored for the lower range of thicknesses. For metal from $1\frac{1}{2}$ to $2\frac{1}{2}$ inches in thickness, there is little difference in sensitivity between the two methods and either may be used.

The gamma ray technique, because of the portability of its equipment, has an advantage in places which are inaccessible to X-ray equipment and for very heavy material which is beyond the range of the usual portable X-ray equipment.

As an aid in determining the size of defects, thickness gages or penetrameters as shown in figure 46 should be used. If

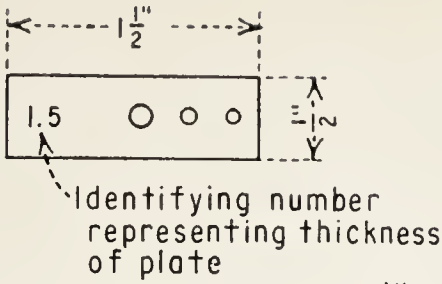

FOR PLATES UP TO AND INCLUDING $2\frac{1}{2}''$ THICKNESS

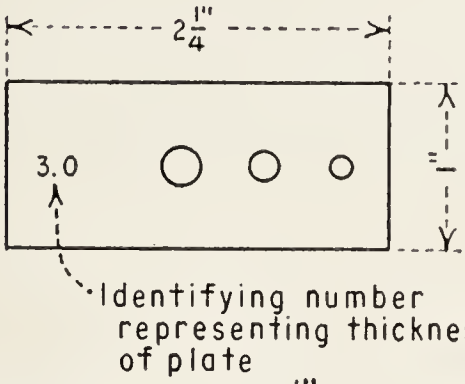

FOR PLATES OVER $2\frac{1}{2}''$ THICKNESS

Thickness of penetrameters: not over 2% of material thickness.
Material: substantially the same as the plate.
Perforations: 3 circular holes, two, three, and four times the penetrameter thickness, respectively, with a minimum of $\frac{1}{16}''$ for X-rays and $\frac{3}{32}''$ for gamma rays

Figure 46—Thickness gages or penetrameters for the radiographic inspection of welds in steel plate.

radiographic exposures are made singly, at least one penetrameter should be used for each exposure. Each penetrameter should be placed at one end of the exposed length, parallel with and adjacent to the weld seam, with the small hole at the outer end. The small hole must be distinguishable on the radiograph. Each penetrameter must carry an identifying number representing to two significant figures the minimum thickness of plate for which it may be used. If all of the exposures in a circumferential joint are made simultaneously, four penetrameters equally spaced along the joint are sufficient. The thickness of penetrameters should be not more than 2 percent of the thickness of the joint to be radiographed. For joints where backing strips and/or weld reinforcement are not removed, a shim should be placed under the penetrameter to allow for the additional thickness. Where practicable, the

penetrameters should be placed outside the limits of the backing strips.

Films should be placed so as to provide an overlap of at least 1 inch at each point where two films meet. Identification markers should be placed adjacent to all joints being radiographed so that the images of the markers will appear on the films. A marking diagram showing the number and location of each film is normally provided by the contractor. All radiographs should be carefully examined, and all unacceptable defects disclosed by the films should be marked and removed by chipping or flame-gouging and chipping to sound metal. The defective areas should then be carefully rewelded and reradiographed. This procedure should be repeated if necessary to secure a sound weld.

Special care should be taken to obtain good radiographs at weld intersections in pipes where longitudinal and circumferential joints meet or cross each other. Such points are subject to cracking because of a concentration of welding stresses. Radiographic exposures should extend over a sufficient area around the weld intersection to include all possible defects.

The following types of defects are unacceptable and are subject to repair:

(a) Any type of crack or zone of incomplete fusion or penetration.

(b) Any elongated inclusion with a length in excess of: ¼ inch when the plate thickness T is less than ¾ inch, ⅓ T when T is ¾ inch to 2¼ inches, ¾ inch when T is 2¼ inches and over.

(c) Any group of slag inclusions in line that have an aggregate length greater than T in a length of $12T$, except when the distance between the successive imperfections exceeds $6L$, where L is the length of the longest imperfection in the group.

(d) Porosity in excess of the standards shown in figure W–524.2 (pages 107 to 111 inclusive) of the 1951 Code.

Figures 47 and 48 are reproductions of radiographs of welds indicating borderline porosity. The porosity in figure 47 is small and well dispersed, and is acceptable. In figure 48, however, the porosity is more extensive and concentrated and would impair the strength of the joint. This stretch of weld is therefore unacceptable and should be repaired.

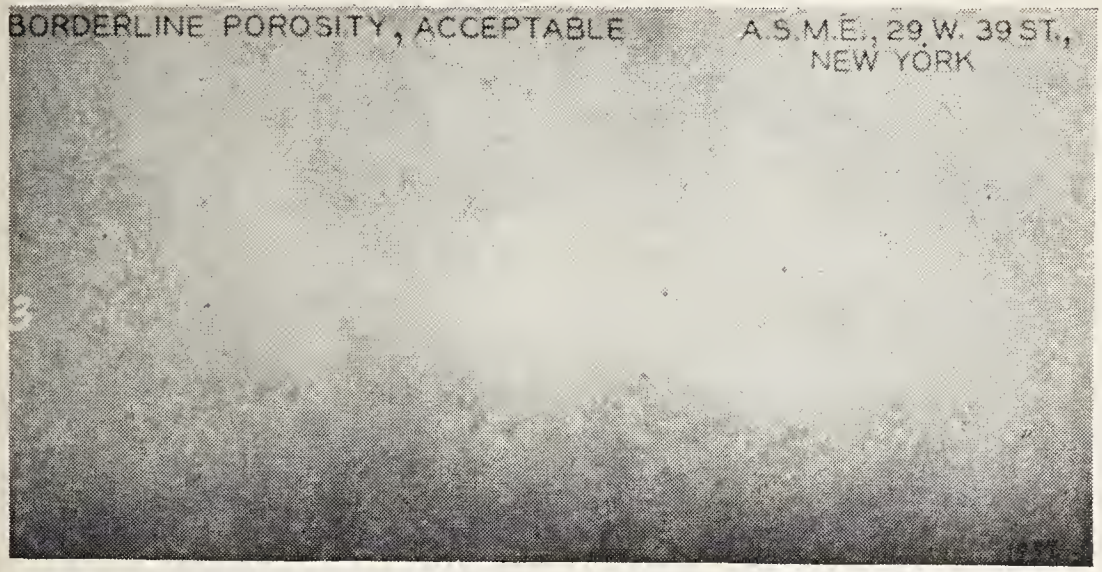

Figure 47—Borderline porosity—acceptable.

38. Interpretation of Radiographs.—The ASTM Committee on Radiographic Testing, under designation E 52–49T, recommended a tentative terminology for defects in castings and weldments. The terminology, with slight modifications, is as follows:

Gas holes or cavities appear as round or elongated, smooth-edged dark spots occurring individually, in clusters, or distributed throughout the casting or the weld metal.

Gas porosity is represented by round or elongated dark spots corresponding to minute voids usually distributed throughout the casting or the weld metal.

Shrinkage cavities are represented by dendritic, filamentary, or jagged darkened areas.

Shrinkage porosity or sponge in nonferrous alloys is shown by localized lacy or honey-combed darkened areas.

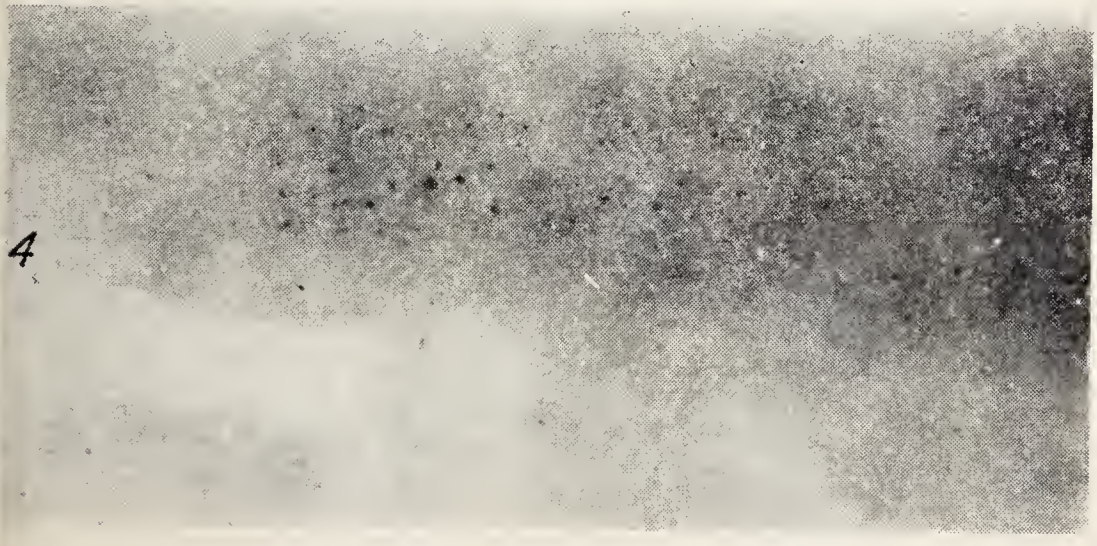

Figure 48—Borderline porosity—not acceptable.

244795—53——9

Foreign materials appear as isolated, irregular, or elongated variations of film density which do not correspond to variations in thickness of material nor to cavities. They may be due to the presence of sand, slag, oxide or dross, or metal of different density.

Gegregations appear as variations in film density which can be explained by segregation of elements with atomic numbers different from that of the matrix.

Hot cracks may appear as ragged dark lines of variable width and numerous branches. They have no definite line of continuity and may exist in groups. They may originate internally or at the surface.

Cold cracks appear as straight lines visually continuous throughout their length, and generally exist singly. These cracks start at the surface.

Cold shuts appear as distinct darkened lines or bands of variable length and definite smooth outline.

Surface irregularities are any images corresponding to irregularities visible on the surface.

Misruns appear as prominent darkened areas of variable dimensions with a definite smooth outline.

Core shifts appear as a variation in wall thickness.

Incomplete joint penetration (lack of fusion) appears as elongated darkened lines of varying length and width which may occur in any part of the welding groove.

Undercuts appear as dark areas caused by depressions or grooves adjoining the toe of the weld.

A complete record of all radiographic work, containing the following information, should be maintained by the inspector:

(a) Radiographs showing acceptable welds.

(b) Radiographs showing defective welds requiring repairs.

(c) Reradiographs or retakes showing the weld after repairs.

The radiographs should be identified with proper markings and filed at the nearest project office for retention by the Government for a period of at least 5 years.

Figures 49 to 55, inclusive, show a number of typical radiographs of welds in steel pipe taken in the course of routine inspection during fabrication and installation. The welds featured in figures 49 and 50 were made by the Unionmelt process in 1-inch thick plate. While the section of weld shown in figure 49 is acceptable, the weld shown in figure 50 includes a crack, an unfused area, and some slag pockets,

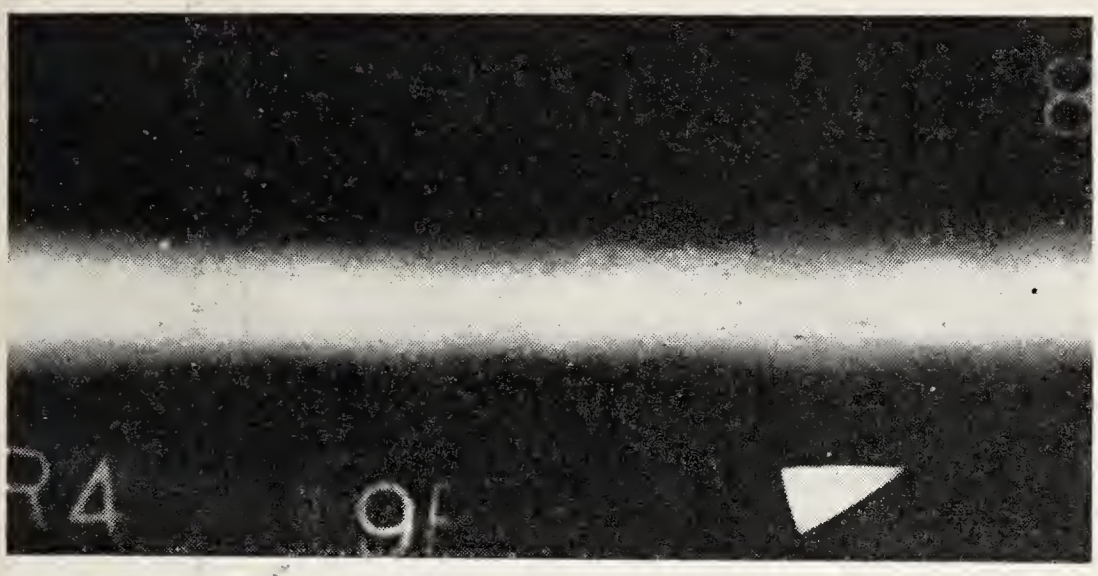

Figure 49—Radiograph of automatic weld in 1-inch plate showing no defects.

which render it unacceptable. The weld shown in figure 51 is a manual weld in $^{15}/_{16}$-inch thick plate. As there are no objectionable defects evident, this section of weld is acceptable. Figure 52 shows an automatic weld in $^{15}/_{16}$-inch thick plate with a number of large slag pockets in the weld which are not acceptable. The weld shown in figure 53 was made in 1-inch thick plate using the Unionmelt process. Because of the crack through the center of the weld, this section was not accepted. Figure 54 shows a manual weld in ½-inch thick plate. On account of the lack of fusion indicated along the joint, this weld was rejected. The manual weld in ½-inch thick plate, shown in figure 55, was rejected because of excessive slag inclusions.

Figure 50—Radiograph of automatic weld in 1-inch plate showing crack, lack of fusion, and inclusions.

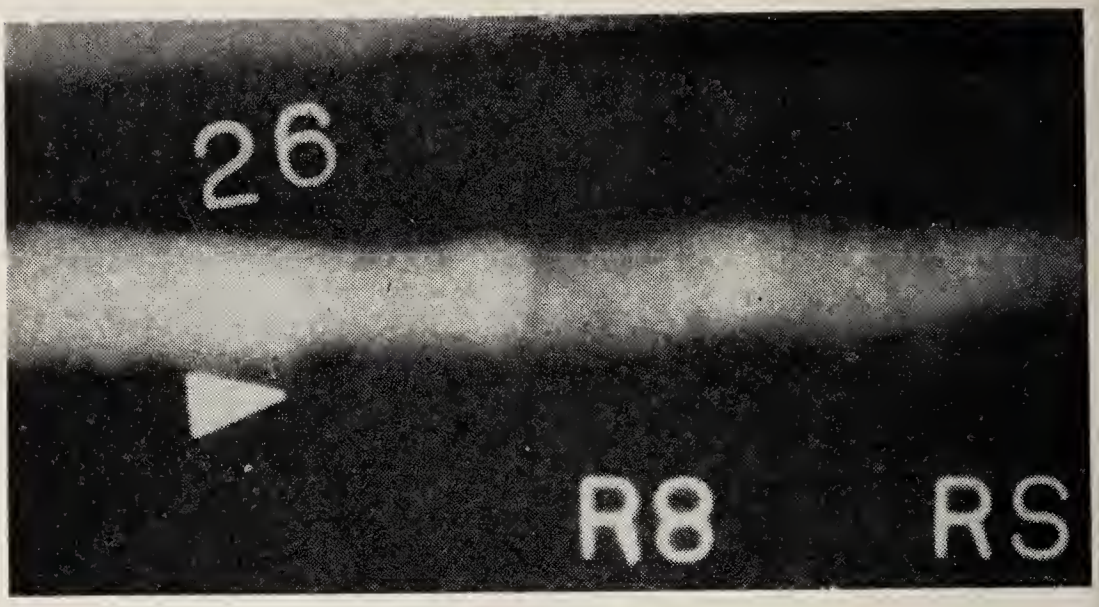

Figure 51—Radiograph of manual weld in 15/16-inch plate with no defects.

39. Magnaflux Inspection.—Magnaflux or magnetic particle inspection is a nondestructive method which may be used for detecting cracks or other defects at or near the surface of steel or other magnetic material. The surface to be inspected must be clean and dry. Most welds may be inspected without special preparation except cleaning. The inspections are made by producing a magnetic field with an electric current in the specimen to be tested, and applying finely divided ferromagnetic particles (magnaflux powder) on the surface of the specimen. Minute poles are set up on the surface of the specimen wherever the magnetic field is broken or distorted by a crack or other defect. The particles are strongly attracted

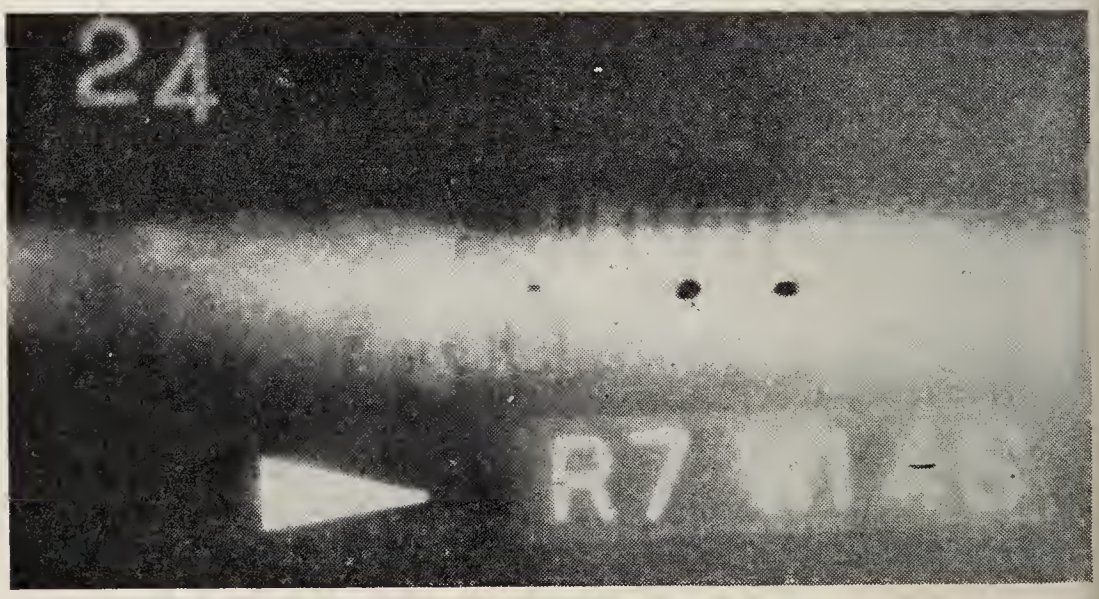

Figure 52—Radiograph of automatic weld in 15/16-inch plate showing large slag pockets and inclusions.

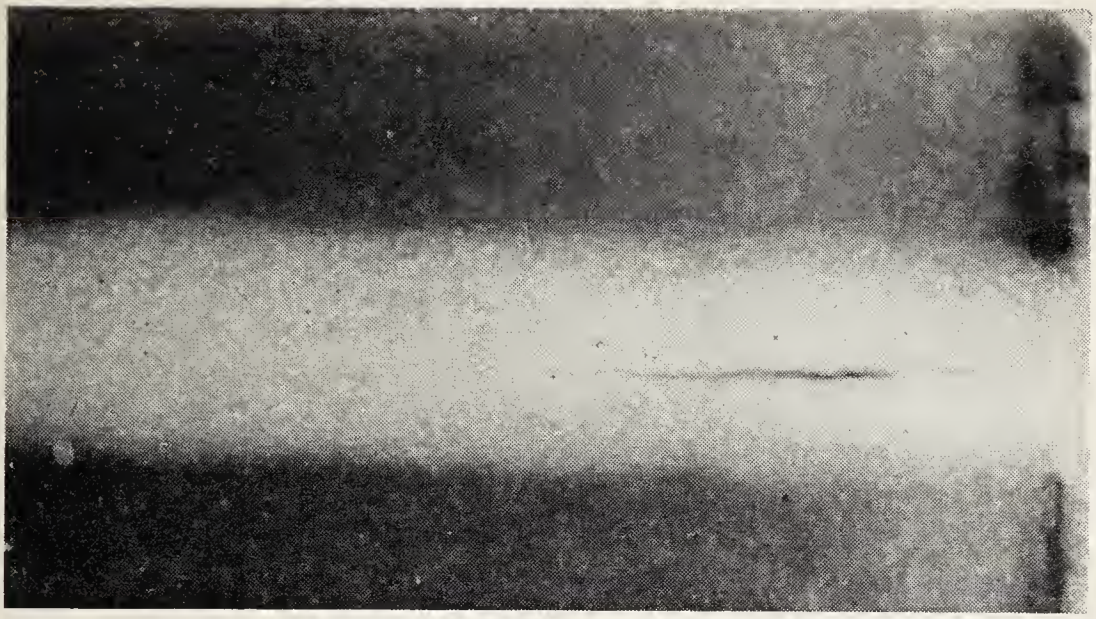

Figure 53—Radiograph of automatic weld in 1-inch plate showing crack.

by these poles and are held more firmly to them than to other parts of the surface of the specimen. This results in the formation of a visible indication over the defect. The particles may be applied dry by dusting from a shaker, or the specimen may be immersed in kerosene or a similar vehicle in which the particles have been dispersed.

Although subsurface defects may be detected by magnaflux inspection under suitable conditions, the method is most reliable for the detection of surface cracks, laminations, or other defects in welds and plates. Being a magnetic method, it is applicable only to ferro-magnetic materials and cannot be used

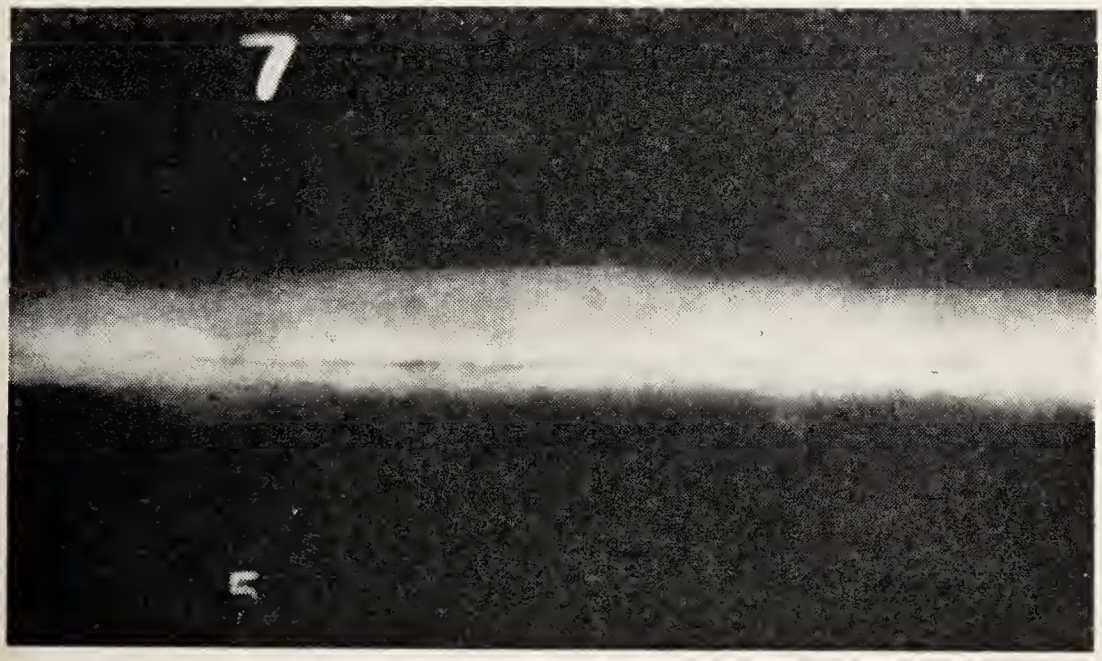

Figure 54—Radiograph of manual weld in ½-inch plate showing lack of fusion.

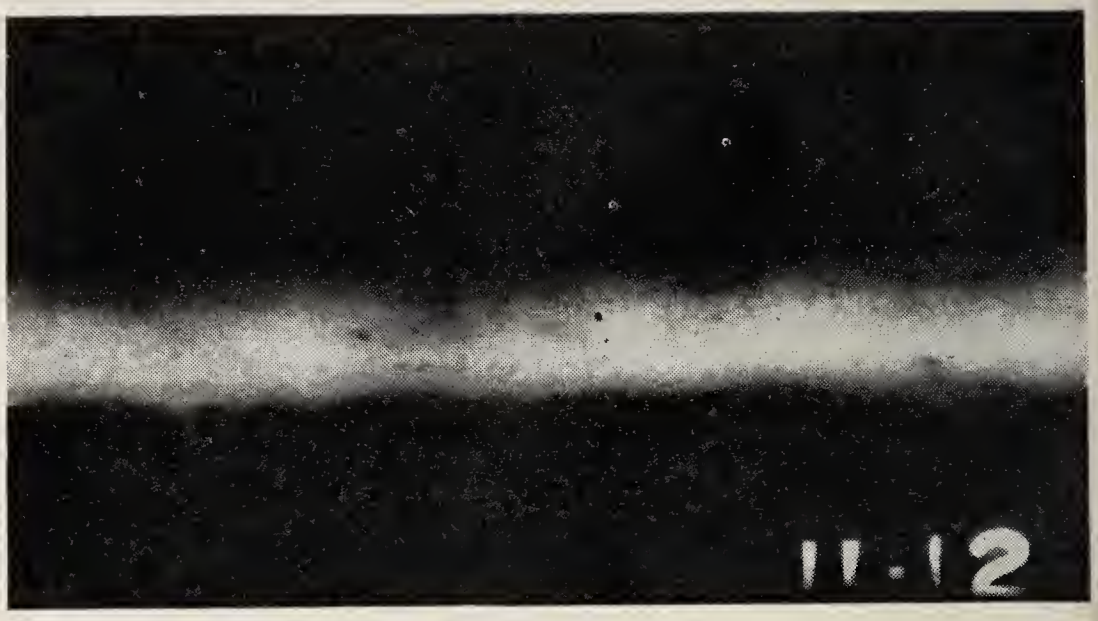

Figure 55—Radiograph of manual weld in ½-inch plate showing slag inclusions.

to inspect nonferrous materials or austenitic steels. The sensitivity of this method in the detection of subsurface defects decreases with a decrease in size of the discontinuity and with an increase in depth below the surface. The method affords maximum sensitivity on defects which are essentially normal to the surface on which the inspection is being carried out.

Various techniques and procedures are used, each with certain advantages and limitations. Specific techniques must be established in order to produce consistent and comparable results. Both alternating and direct current are used for the purpose of magnetizing the parts to be inspected. The currents are usually of high amperage, but low voltage. For the inspection of small parts which can be brought conveniently to the unit, stationary equipment is used. For large parts, portable equipment is more convenient.

40. Hydrostatic Pressure Tests.—If required by the specifications, each individual pipe section or pressure tank should be subjected to a hydrostatic pressure test. These tests should not be made until after all welding has been inspected, radiographed, repaired where required, and finally accepted by the inspector. The tests should be performed at a sufficient pressure to prove the adequacy of all welds and plates with the required margin of safety. Unless otherwise called for in the specifications, a stress equal to 1½ times the design stress should be produced in the test. The pressure to be applied during the test to produce this stress may be computed from the formula,

$$p=1.5\left[\frac{2st}{d}\right]$$

in which p=maximum test pressure, pounds per square inch
s=design stress, pounds per square inch
t=minimum plate thickness in test section, inches
d=maximum internal diameter in test section, inches.

The pressure should be applied slowly up to the above maximum value, then lowered to 1¼ times the design pressure, then raised again to 1½ times the design pressure and held at that value for a sufficient length of time to permit the inspection of all plates, welds, and connections for leaks or signs of failure. No hammer test should be applied. The pipe and water temperature should preferably be not less than 60° F. during the test, and the section should be vented at high points during filling to prevent the formation of air pockets. Objectionable defects disclosed during the test should be repaired and the section retested to prove the safety of the repairs.

In lieu of pressure tests of individual pipe sections, the specifications may require that the entire pipe line be tested after installation, which is known as a proof hydrostatic test. This procedure is preferable as it subjects to test all plates and welds, including the field welds, expansion joints, and all connections in the line. The test pressure should be such that pressures exceeding 1½ times the design pressure will not occur at any point in the line or portion of the line being tested. Compliance with this requirement will usually result in test pressures and stresses less than 1½ times the design pressure and stress in some portions of the line. The test procedure is otherwise the same as that outlined above for testing individual pipe sections. All pressure tests and repairs following the tests must be witnessed by the inspector.

41. Fluorescent Penetrant Inspection.—This is a nondestructive test method for locating cracks, pores, leaks, and similar discontinuities in solid materials. It is particularly adapted for the detection of surface defects in nonmagnetic materials. Its principal uses are for the inspection of welds in aluminum, magnesium, and austenitic steels. The inspection is based on the use of a water-washable penetrant of high fluorescence and unusual penetrating properties. Due to its low surface tension, it will readily be drawn into extremely small surface openings by capillary action. It carries a dye in solution which will fluoresce brilliantly when exposed to near ultraviolet or black light.

The technique consists of applying a surface film of penetrant by dipping, brushing, or spraying to the areas being inspected. A penetration time of from one minute to several hours may be required, depending on the material and the type of defect. The part to be inspected must be clean and dry to make it possible for the penetrant to enter the discontinuity and produce an indication. After penetration, all traces of the penetrant must be removed by a water rinse. This operation should be done under black light with a special low-pressure water spray to assure a thorough operation. It may also be accomplished with clean water-soaked rags or by sandblasting. Solvents should not be used as they may remove indications of discontinuities.

Dry developer is applied to the surface after drying. The drying may be accomplished by a hot-air dryer, by a blast of clean dry air, or by standing in air. Dry developer may be applied with a spray bulb or a powder gun or by dipping small parts in the powder. After application of the dry developer a developing time equal to about one-half of the penetration time should be allowed. If wet developer is used it is applied to the surface in the form of a colloidal water suspension after rinsing and before drying. It may be applied by dipping or spraying. Hot air drying is recommended. No additional developing time is necessary as the indications are developed during the drying operation.

The actual inspection is conducted under a fixed or portable black light with all other lights subdued. This may be in a booth or shaded area in the plant. The indications fluoresce brilliantly, and a deep discontinuity may be distinguished from a shallow one by the width or amount of fluorescent bleeding of the indication.

Large weldments of nonmagnetic pressure and storage vessels and piping such as those used in the petroleum, chemical, and dairy industries, are commonly inspected for surface cracks and porosity with this method, using portable equipment. Small welds in aluminum, magnesium, and austenitic steel for aircraft and jet engines and welded valve facings are usually inspected by standard stationary equipment. Lined or clad vessels may be inspected quickly and effectively for the detection of cracks, pores, and leaks through the lining. Fluorescent penetrant inspection may be applied to all types of welded linings, using the same technique as for large welded parts. One of the simplest and most useful applications is leak detection. The method may be used for both magnetic

and nonmagnetic welds and also on brazed joints. The procedure is to apply the fluorescent penetrant to one side of the joint by brushing or spraying. The other side is then examined with a portable black light. Dry developer may be used on the side being inspected to intensify indications.

42. Metallographic Tests.—Metallographic tests are required only in special cases when it is desired to determine the grain structure of the weld metal and the heat-affected zone, the number of weld passes, or the distribution of nonmetallic inclusions. The tests may involve only visual examination, in which case macrographs of the etched joint, magnified not more than 10 times, are sufficient. But for a closer examination of the grain structure and inclusions, the weld is examined under a microscope using a magnification of 100 to 1,000 diameters.

For macroscopic examination of iron and steel the surface to be examined may be prepared by one of the following methods:

(a) Without any finishing or other preparation, place specimen in a boiling 50 percent solution of hydrochloric (muriatic) acid until there is a clear definition of the structure of the weld. This will take about 30 minutes.

(b) Grind and polish specimen with emery wheel or emery paper. Then etch with a solution of one part ammonium persulfate (solid) and nine parts of water, by weight, applying the solution at room temperature by rubbing vigorously with a piece of cotton saturated with it. The etching process should be continued until a clear definition of the weld is shown.

(c) Grind and polish specimen with emery wheel or emery paper and etch with a solution consisting of one part of powdered iodine (solid form), two parts of powdered potassium iodide, and three parts of water by weight. The solution should be used at room temperature and should be brushed on the surface to be etched until there is a clear definition of the structure of the weld.

After being etched by one of the above methods, the specimen should be washed in clear water, then immersed in ethyl alcohol and dried. The etched surface may then be preserved by coating with a thin clear lacquer. Figure 3 shows a typical macrograph of an automatically welded two-pass butt joint in a 2½-inch thick steel plate. Figure 56 shows a macrograph (at two diameters) of an identical weld indicating a small crack. In order to explore this crack a larger macrograph (at

10 diameters) was made as shown in figure 57. The enlarged photograph distinctly shows the crack at the root of the weld pass.

Specimens used for microscopic examination should be polished and etched by standard metallographic procedures. The preparation of sample and the interpretation of the structures revealed should be accomplished by someone with special training in this field.

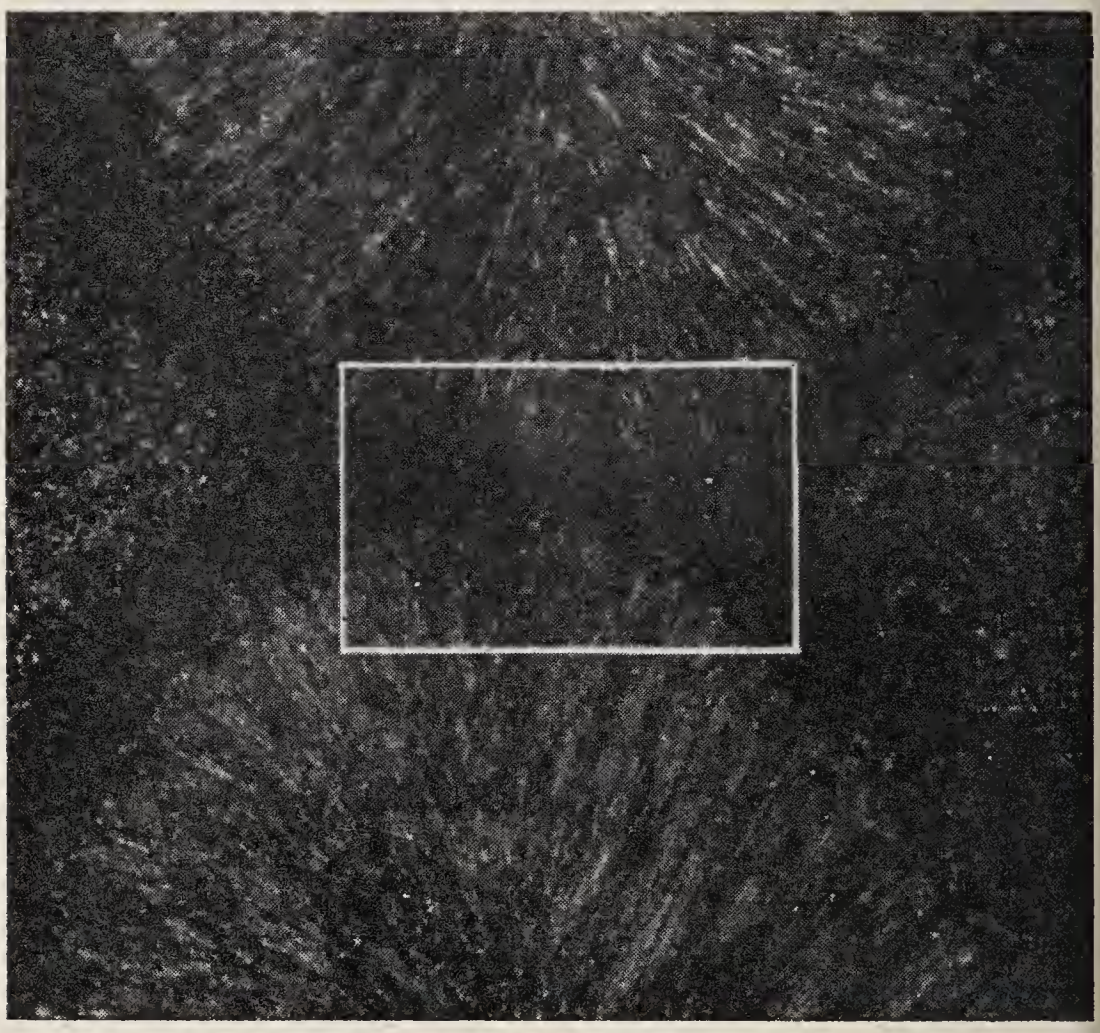

Figure 56—Macrograph (2 diameters) indicating crack at root of weld.

Great care should be taken in the handling of the various acids used for etching weld specimens. Approved safety goggles and rubber gloves should be used for protection against burns or poisoning.

Figure 58 is a micrograph (at 100 diameters) showing the coarse dendritic structure of the weld metal, and figure 59 is a micrograph (at 100 diameters) representing the fine-grained structure of the heat-affected zone near the above weld. Figures 60 and 61 are micragraphs (at 100 diameters) of the normal grain structure of the steel plate in which the above

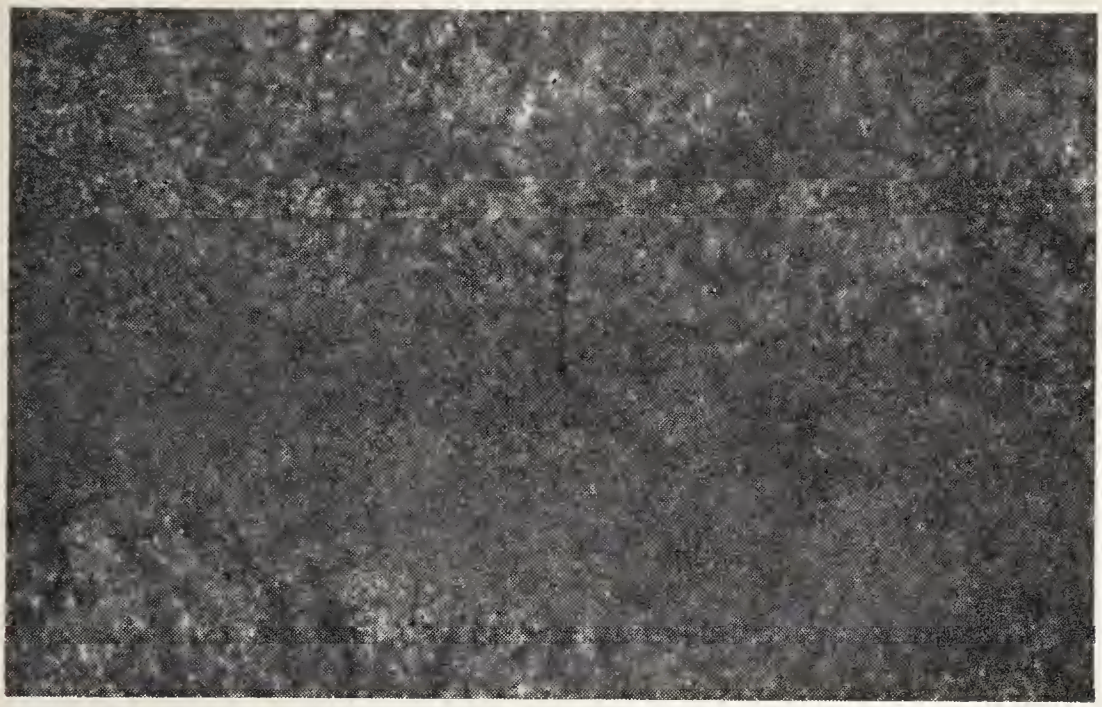

Figure 57—Macrograph (10 diameters) showing crack at root of weld.

weld was made. The figures show the distribution of the ferrite and pearlite. In figure 60, however, the surface has not been etched sufficiently to develop the ferrite grain boundaries. In figure 61 a deeper etching has brought out the ferrite grain boundaries and the distribution of pearlite.

43. Inspection of Shop Assembly and Marking.—Complete or partial shop assembly of certain parts, in order to insure a proper field fit, may be provided for in the specifications. In these cases and where proper fitting or matching is questionable, the parts should be carefully assembled in the presence of the inspector. A proper fit between component parts is especially important where field installation is performed under a separate contract. Discrepancies in such cases will require correction in the field and may lead to claims for extra compensation. Time and expense can be saved by detecting and correcting misfits in the shop prior to shipment. Any unsatisfactory fits should be remedied and the parts reassembled if necessary. In any event, all dimensions shown on the drawings require careful checking, and the inspector should satisfy himself that all parts will fit properly before the material is shipped. Large pipe sections, the shop assembly of which is not feasible, may be fitted together at the ends with the aid of special ring gages, or by other means that may have been specified to facilitate field assembly.

The fabricator is generally required to furnish erection diagrams and mark all parts with erection numbers and match-

Figure 58—Micrograph of weld metal (100 diameters).

Figure 59—Micrograph of heat-affected zone.

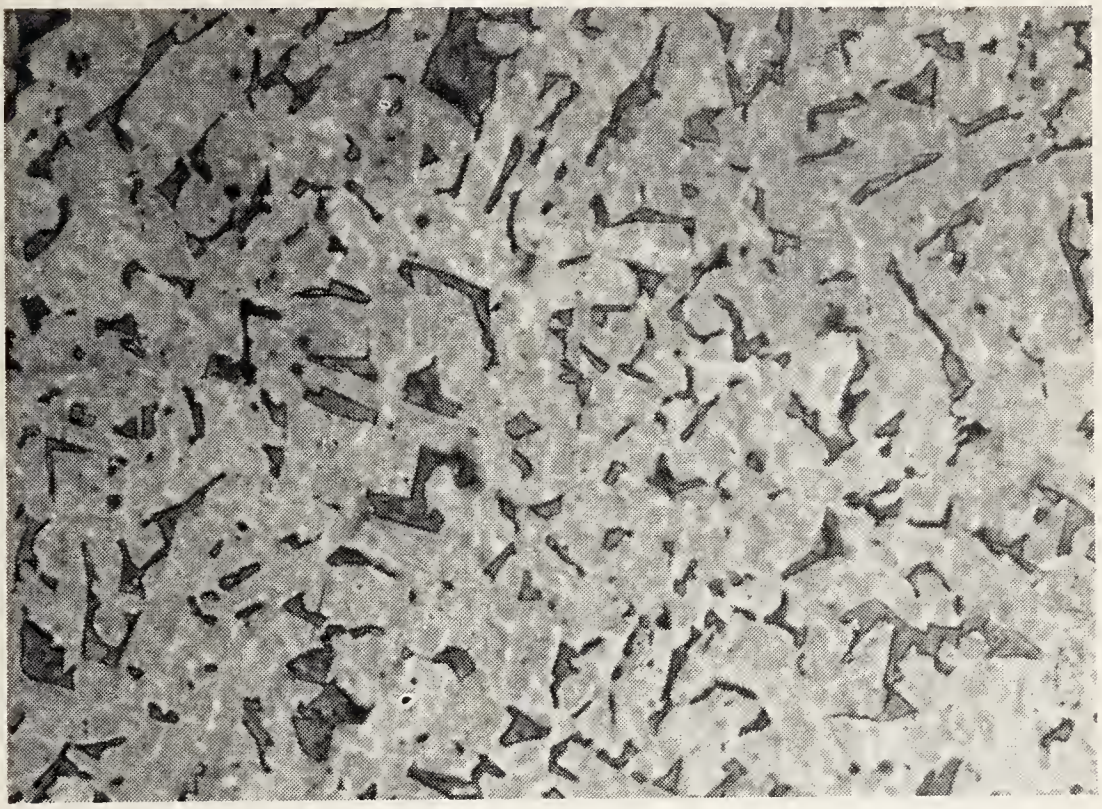

Figure 60—Micrograph of steel plate (100 diameters).

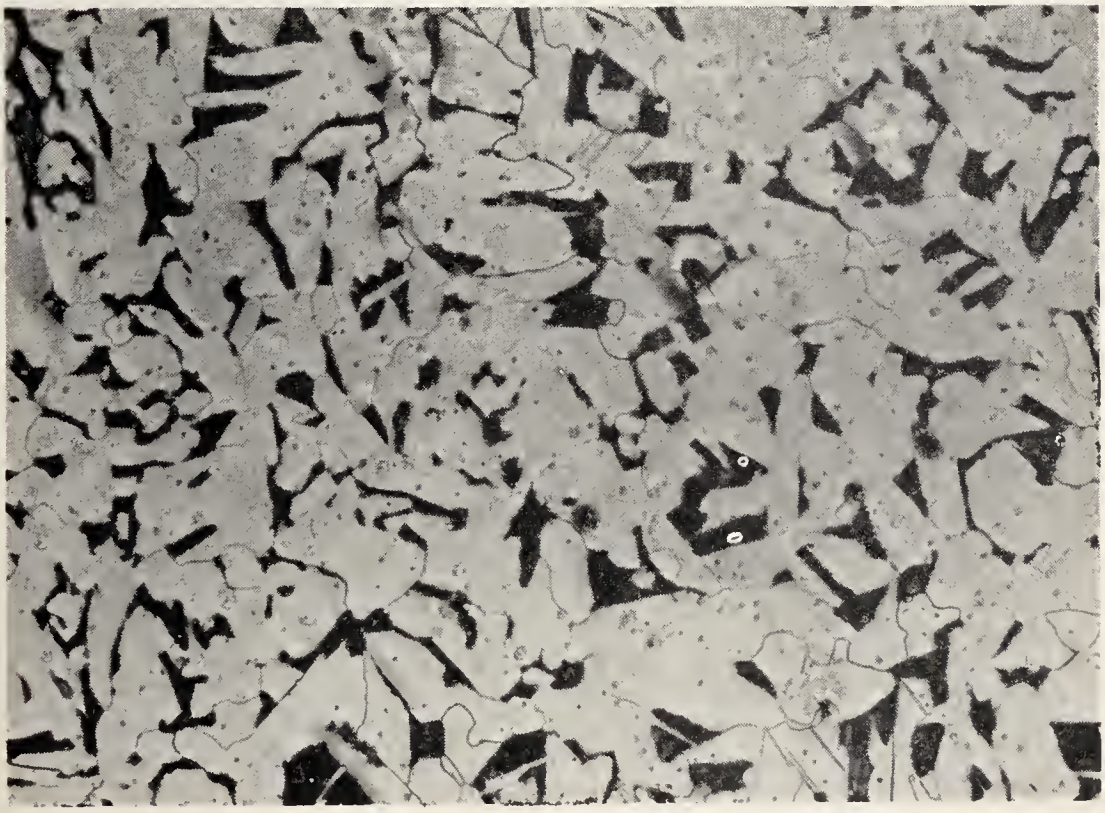

Figure 61—Micrograph of deep-etched steel plate (100 diameters).

marks to facilitate field assembly and erection. Mark numbers should be legibly painted on the steel in accordance with the erection diagram. Punch marks used for matching parts of a structure should be located by painted arrowheads or otherwise indicated to insure proper assembly in the field. Each shipping length of pipe should be legibly marked at its lower end inside and on top outside, with the erection number clearly painted.

44. Inspection of Loading Prior to Shipment.—Proper loading and blocking of welded work, especially thin shell pipe, is essential if damage during shipment from the fabricator's plant to the project is to be avoided. The record shows that numerous shipments arrive at destination with material damaged or even lost during transit. It is part of the inspector's duty to review the loading of the material at the fabricator's plant and, if not satisfactory, to insist on adequate blocking, ties, braces, or other safeguards to prevent damage or loss during shipment. In order to be able to place responsibility for material damaged or lost and to obtain restoration, it is necessary to determine the source of the damage and whether the fabricator, the railroad, the trucking company, or the loader or unloader is responsible. For material to be shipped on Government bills of lading, the inspector furnishes the contractor the necessary shipping papers. Shipment should not be authorized unless the material involved has been inspected and accepted by the inspector.

CHAPTER VI—JOINING VARIOUS MATERIALS

45. Cast Iron and Cast Steel.—Although most of the ferrous materials used by the Bureau of Reclamation consist of ordinary low-carbon steel, some higher carbon materials in the form of cast iron and cast steel are used for component parts of control machinery. Such equipment as roller gates, slide gates, ring-follower gates, valves, turbines and pumps, along with certain types of piping, may be made from normally high-carbon cast material. The occasion for joining such materials may arise in the repair of broken sections; in the alteration of existing parts to facilitate installation in the structure; and in the repair of worn and eroded areas, particularly on turbines and pumps.

Cast irons and cast steels are weldable, but the fact that they are often massive and may be high in carbon content requires that certain precautions and procedures be followed to obtain best results. Both materials can be welded by the electric-arc process using suitable electrodes of a composition similar to that of the parent metal. Depending on the type and shape of the cast part, preheating may be required in order to prevent distortion and cracking upon the application of the filler metal. In some cases, it may also be necessary to make use of post heating so that the welded area will not cool too rapidly. Preheating of castings should be carefully done lest thermal strain cause cracking in the members.

It is frequently impracticable to apply either post heat or preheat to a particular welded structure. In such cases, the use of electrodes of similar composition to that of the parent metal is usually not desirable, and a more ductile electrode material is required to prevent cracking of the weld and reduce the tendency toward the formation of hard spots. Metals which fuse and alloy readily with cast irons and cast steels are principally of the nickel and nickel-alloy types. Electrodes made of these metals provide deposits which are generally not hardenable through quenching, thereby overcoming the bad effects of too rapid cooling occasioned by welding on large massive sections.

Nickel- or stainless-steel electrodes are most generally used by the Bureau in the repair of cast steels which are affected by erosion and cavitation damage. This is because such types

of weld materials offer much better resistance to these actions than the original parent metal. Many different types of electrodes in this classification are available for use in electric-arc welding. The choice of a particular type is determined by the end use to which the machine is placed. Also, since these electrodes are relatively expensive, the quantity required to effect a repair may determine the type of electrode that should be used.

In joining cast irons and cast steels for frames and casings of machinery, use may advantageously be made of gas welding since the types of welding rod available for this process produce weld deposits which are both strong and ductile and are not affected by rapid cooling. Brazing is the gas-welding process most generally used for welding of cast irons and cast steels. It is not a full fusion method such as the electric-arc process. Nevertheless, through the proper choice of welding rod, brazed joints can be made having a strength equal to or greater than that of the original material.

In field welding of cast ferrous alloys it is important to recognize the effects of the carbon content and the grade or type of cast material to be welded. It is also necessary to determine the need for and the amount of preheating and post heating of the particular section. Generally, it is necessary to preheat such materials as cast iron. In the identification of cast iron and cast steel, the following superficial characteristics will be helpful in providing a means of separating the several types:

(a) *White Cast Iron:*
Fracture, white.
Will not smudge finger if rubbed on fresh fracture.
Difficult to machine or file.

(b) *Gray Cast Iron:*
Fracture, grayish black.
Will smudge finger if rubbed on fresh fracture.
Easily machinable.
Can be chipped or filed.

(c) *Malleable Cast Iron:*
Fracture, grayish black, except in the outer layer which may be lighter.
Can be moderately bent.
Can be readily machined, filed, or chipped.

(d) *Alloy Cast Iron and Cast Steels:*
These metals are not readily differentiated by superficial means. Other methods such as magnetic test-

ing, spark testing, or chemical spot testing may be resorted to for more positive identification.

Figure 62 illustrates the typical results or characteristics of a spark test of each of the several iron and steel materials.

Defects in welds made on cast materials can be detected by methods similar to those which are used in welding ordinary low-carbon steels. The tendency for porosity of welds in cast metals, however, is much greater than in rolled metals because the cast metals generally have more impurities and gases in solution. In spite of all the precautions and inspections that may be applied to the welding of cast materials, nothing can assure a first-class job as much as familiarity and experience with the particular type of welding.

46. Reinforcing Steels.—The Bureau uses a very large amount of reinforcing steel in its various concrete structures. This type of steel is normally obtained under Federal specification QQ–B–71a in various grades and types according to requirements of the design. The basic open-hearth process is used in the production of most of the plain-carbon steel billets required in the manufacture of reinforcing steel. Reinforcing bars may be made from new billet steel, rerolled axle steel, or rerolled rail steel. From new billet steel and rerolled axle steel are obtained bars of structural, intermediate, and hard grades. From rail steel are obtained only reinforcing bars of hard grade. Structural grade bars have a carbon content normally in the neighborhood of 0.30 percent; intermediate grade bars have carbon contents ranging from 0.30 to 0.60 percent; and hard grade bars range upwards from 0.60 percent in carbon content.

In Bureau construction work, bars of the intermediate and hard grade classifications are used primarily. It is apparent, therefore, that in joining reinforcing steel by welding, the high carbon content of such material will necessitate extra care and precaution in order to obtain suitable welds. Manual arc welding is the most commonly used method for joining bars in the field, and for this purpose the heavily coated mild-steel electrodes of the E–6000 series will generally produce joints of sufficient strength. Where an occasional small number of bars are to be joined and it is impracticable to take the required precautions to obtain a ductile weld, a stainless-stell or nickel-alloy type electrode may be used to overcome brittleness of the joint.

For joining the smaller size bars the usual precautions include only the use of the proper electrode and assuring that

244795—53——10

Spark tests should be made on a high speed power grinder, and the specimen should be held so that the sparks will be given off horizontally. For most accurate results, the sparks should be examined against a dark background, preferably in a dark corner of the shop.

The color, shape, average length, and activity of the sparks are details which are characteristics of the material tested. Spark testing can be a very accurate method of identifying metals but it requires considerable practice and experience to become an expert. Several common sparks are given in the table. If the operator learns the technique for identifying these metals readily, he will soon be able to expand his experience to include others by observation and comparison with the sparks from known samples.

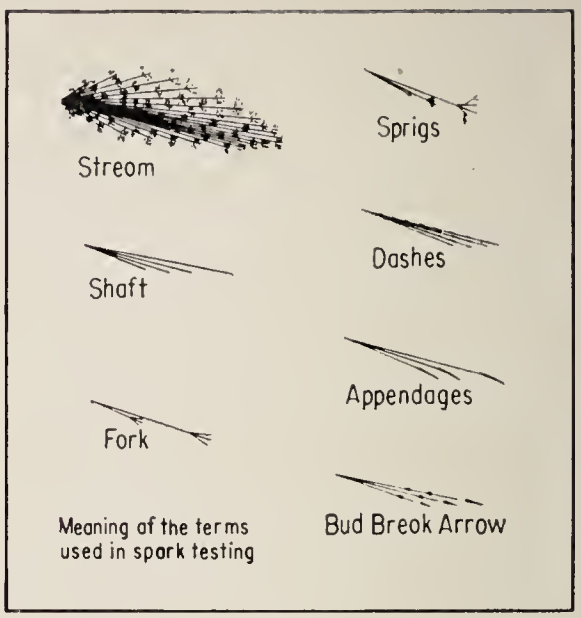

Wrought Iron	Low-carbon Steel*	High-carbon Steel	Alloy Steel**
Color - straw yellow Average stream length with power grinder-65 in. Volume - large Long shafts ending in forks and arrowlike appendages Color - white	Color - white Average length of stream with power grinder-70 in. Volume - moderately large Shafts shorter than wrought iron and in forks and appendages Forks become more numerous and sprigs appear	Color - white Average length of stream with power grinder-55 in. Volume - large Numerous small and repeating sprigs	Color - straw yellow Stream length varies with type and amount of alloy content Shafts may end in forks, buds or arrows, frequently with break between shaft and arrow. Few, if any, sprigs Color - white
White Cast Iron	**Gray Cast Iron**	**Malleable Iron**	**Nickel*** **
Color - red Color - straw yellow Average stream length with power grinder - 20 in. Volume - very small Sprigs - finer than gray iron, small and repeating	Color - red Color - straw yellow Average stream length with power grinder - 25 in. Volume - small Many sprigs, small and repeating	Color - straw yellow Average stream length with power grinder - 30 in. Volume - moderate Longer shafts than gray iron ending in numerous small, repeating sprigs	Color - orange Average stream length with power grinder - 10 in. Short shafts with no forks or sprigs

*These data apply also to cast steel
**Spark shown is for stainless steel
***Monel metal spark is very similar to nickel

COURTESY LINDE AIR PRODUCTS COMPANY

Figure 62—Simple tests for identifying metals—spark tests. (Sheet 1 of 8.)

	White Cast Iron°	Gray Cast Iron	Malleable Iron*	Wrought Iron
FRACTURE	Very fine silvery white silky crystalline formation	Dark gray	Dark gray	Bright gray
UNFINISHED SURFACE	Evidence of sand mold; dull gray	Evidence of sand mold; very dull gray	Evidence of sand mold; dull gray	Light gray, smooth
NEWLY MACHINED SURFACE	Rarely machined	Fairly smooth; light gray	Smooth surface; light gray	Very smooth surface; light gray

	Low-carbon Steel	High-carbon Steel	Alloy Steel **	Copper
FRACTURE	Bright gray	Very light gray	Medium gray	Red color
UNFINISHED SURFACE	Dark gray; forging marks may be noticeable; cast-evidences of mold	Dark gray; rolling or forging lines may be noticeable	Dark gray; relatively rough; rolling or forging lines may be noticeable	Various degrees of reddish brown to green due to oxides; smooth
NEWLY MACHINED SURFACE	Very smooth; bright gray	Very smooth; bright gray	Very smooth; bright gray	Bright copper red color dulls with time

	Brass and Bronze	Aluminum† and Alloys	Monel Metal	Nickel	Lead††
FRACTURE	Red to yellow	White	Light gray	Almost white	White; crystalline
UNFINISHED SURFACE	Various shades of green, brown, or yellow due to oxides; smooth	Evidences of mold or rolls; very light gray	Smooth; dark gray	Smooth; dark gray	Smooth; velvety; white to gray
NEWLY MACHINED SURFACE	Red through to whitish yellow; very smooth	Smooth; very white	Very smooth; light gray	Very smooth; white	Very smooth; white

° Very seldom used commercially.
* Malleable iron should always be bronze-welded.
** Alloy steels vary so much in composition and consequently in results of tests that experience is the best solution to identification problems.
† Due to white or light color and extremely light weight aluminum is usually easily distinguishable from all other metals; aluminum alloys are usually harder and slightly darker in color than pure aluminum.
†† Weight, softness and great ductility are distinguishing characteristics of lead.

Figure 62—Simple tests for identifying metals—appearance tests. (Sheet 2 of 8.)

	White Cast Iron°	Gray Cast Iron	Malleable Iron*	Wrought Iron
APPEARANCE OF CHIP	Small broken fragments	Small, partially broken chips but possible to chip a fairly smooth groove	Chips do not break short as in cast iron	Smooth edges where cut
SIZE OF CHIP		$\frac{1}{8}$ inch	$\frac{1}{4}$ - $\frac{3}{8}$ inch	Can be continuous if desired
FACILITY OF CHIPPING	Brittleness prevents chipping a path with smooth sides	Not easy to chip because chips break off from base metal	Very tough, therefore harder to chip than cast iron	Soft and easily cut or chipped

	Low-carbon Steel	High-carbon Steel	Alloy Steel **	Copper
APPEARANCE OF CHIP	Smooth edges where cut	Fine grain fracture; edges lighter in color than low-carbon steel	* *	Smooth chips; saw edges where cut
SIZE OF CHIP	Can be continuous if desired	Can be continuous if desired	* *	Can be continuous if desired
FACILITY OF CHIPPING	Easily cut or chipped	Metal is usually very hard but can be chipped	* *	Very easily cut

	Brass and Bronze	Aluminum† and Alloys	Monel Metal	Nickel	Lead††
APPEARANCE OF CHIP	Smooth chips; saw edges where cut	Smooth chips; saw edges where cut	Smooth edges	Smooth edges	Any shaped chip can be secured because of softness
SIZE OF CHIP	Can be continuous if desired	Can be continuous if desired	Can be continuous if desired	Can be continuous if desired	Can be continuous if desired
FACILITY OF CHIPPING	Easily cut, more brittle than copper	Very easily cut	Chips easily	Chips easily	Chips so easily it can be cut with penknife

° Very seldom used commercially.
* Malleable iron should always be bronze-welded.
** Alloy steels vary so much in composition and consequently in results of tests that experience is the best solution to identification problems.

† Due to white or light color and extremely light weight aluminum is usually easily distinguishable from all other metals; aluminum alloys are usually harder and slightly darker in color than pure aluminum.
†† Weight, softness and great ductility are distinguishing characteristics of lead.

Figure 62—Simple tests for identifying metals—chip tests. (Sheet 3 of 8.)

	White Cast Iron°	Gray Cast Iron	Malleable Iron*	Wrought Iron
SPEED OF MELTING (From Cold State)	Moderate	Moderate	Moderate	Fast
COLOR CHANGE WHILE HEATING	Becomes dull red before melting	Becomes dull red before melting	Becomes red before melting	Becomes bright red before melting
APPEARANCE OF SLAG	A medium film develops	A thick film develops	A medium film develops	Oily or greasy appearance with white lines

	Low-carbon Steel	High-carbon Steel	Alloy Steel **	Copper
SPEED OF MELTING (From Cold State)	Fast	Fast	* *	Slow
COLOR CHANGE WHILE HEATING	Becomes bright red before melting	Becomes bright red before melting	* *	May turn black and then red; copper color may become more intense
APPEARANCE OF SLAG	Similar to molten metal	Similar to molten metal	* *	So little slag that it is hardly noticeable

	Brass and Bronze	Aluminum† and Alloys	Monel Metal	Nickel	Lead††
SPEED OF MELTING (From Cold State)	Moderate to fast	Faster than steel	Slower than steel	Slower than steel	Very fast
COLOR CHANGE WHILE HEATING	Becomes noticeably red before melting	No apparent change in color	Becomes red before melting	Becomes red before melting	No apparent change
APPEARANCE OF SLAG	Various quantities of white fumes; though bronze may not have any	Stiff black scum	Gray scum; considerable amounts	Gray scum; less slag than Monel Metal	Dull gray coating

° Very seldom used commercially.
* Malleable iron should always be bronze-welded
** Alloy steels vary so much in composition and consequently in results of tests that experience is the best solution to identification problems.

† Due to white or light color and extremely light weight aluminum is usually easily distinguishable from all other metals; aluminum alloys are usually harder and slightly darker in color than pure aluminum.
†† Weight, softness and great ductility are distinguishing characteristics of lead

Figure 62—Simple tests for identifying metals—blowpipe tests. (Sheet 4 of 8)

	White Cast Iron°	Gray Cast Iron	Malleable Iron*	Wrought Iron
ACTION OF SLAG	Quiet, tough, but can be broken up	Quiet, tough, but possible to break it up	Quiet, tough, but can be broken	Quiet; easily broken up
APPEARANCE OF MOLTEN PUDDLE	Fluid and watery, reddish white	Fluid and watery, reddish white	Fluid and watery, straw color	Liquid, straw color
ACTION OF MOLTEN PUDDLE UNDER BLOW-PIPE FLAME	Quiet, no sparks, depression under flame disappears when flame is removed	Quiet, no sparks, depression under flame disappears when flame is removed	Boils and leaves blowholes, surface metal sparks, interior does not	Does not get viscous, generally quiet, may be slight tendency to spark

	Low-carbon Steel	High-carbon Steel	Alloy Steel**	Copper
ACTION OF SLAG	Quiet	Quiet	* *	Quiet
APPEARANCE OF MOLTEN PUDDLE	Liquid, straw color	Lighter than low-carbon steel, has a cellular appearance	* *	Has mirrorlike surface directly under flame
ACTION OF MOLTEN PUDDLE UNDER BLOW-PIPE FLAME	Molten metal sparks	Sparks more freely than low-carbon steel	* *	Tendency to bubble, puddle solidifies slowly and may sink slightly

	Brass and Bronze	Aluminum† and Alloys	Monel Metal	Nickel	Lead††
ACTION OF SLAG	Appears as fumes	Quiet	Quiet, hard to break	Quiet, hard to break	Quiet
APPEARANCE OF MOLTEN PUDDLE	Liquid	Same color as unheated metal, very fluid under slag	Fluid under slag	Fluid under slag film	White and fluid under slag
ACTION OF MOLTEN PUDDLE UNDER BLOW-PIPE FLAME	Like drops of water, with oxidizing flame will bubble	Quiet	Quiet	Quiet	Quiet, may boil if too hot

° Very seldom used commercially

* Malleable iron should always be bronze-welded.

** Alloy steels vary so much in composition and consequently in results of tests that experience is the best solution to identification problems.

† Due to white or light color and extremely light weight aluminum is usually easily distinguishable from all other metals; aluminum alloys are usually harder and slightly darker in color than pure aluminum.

†† Weight, softness and great ductility are distinguishing characteristics of lead.

Figure 62—Simple tests for identifying metals—blowpipe tests. (Sheet 5 of 8.)

QUICK, EASY TESTS FOR QUALITATIVE IDENTIFICATION OF SOME COMMON WHITE METALS AND ALLOYS

The following procedures will distinguish among Moncl, "S" Monel*, "K" Monel*, Nickel, 30 percent copper nickel, nickel silver, Inconel*, chromium-iron and chromium-nickel stainless steels, Ni-Resist*, ordinary steel, and cast iron. Before testing, the material should be cleaned with emery cloth or a file to remove dirt, grease or corrosion products, or any metallic coating such as galvanizing.*

Test With a Strong Horseshoe Magnet

1. If the material is strongly magnetic, it may be nickel, ordinary steel, cast iron or chromium-iron stainless steel. Confirm as in Procedure A.

2. If the material is slightly magnetic, it probably is Monel** or cold-worked 18–8 stainless steel with or without molybdenum. Confirm as in Procedure B or heat the specimen in hot water, preferably boiling, and retest with a magnet while hot. If the specimen loses its magnetism when heated, it is MONEL.

3. If the material is non-magnetic, it may be copper nickel, nickel silver, "K" Monel, "S" Monel, Inconel, chromium-nickel stainless steel with or without molybdenum, or Ni-Resist. Confirm as in Procedure C.

---

*Names marked with asterisks are registered with the United States Patent Office by the International Nickel Co., through whose courtesy the above tests are reproduced.

**This test should be made preferably after cooling the metal with ice water or a freezing mixture, which will increase the magnetic strength and permit easier distinction between Monel and nickel-copper alloys of lower nickel content, e. g., nickel silver.

Figure 62—Simple tests for identifying metals. (Sheet 6 of 8.)

Procedure A

For Strongly Magnetic Materials:

Place a drop of concentrated nitric acid on a cleaned area.

1. If the acid reacts slowly to a pale-green color, the material is NICKEL.
2. If the acid reacts slowly to a brown-black color, the material is either ORDINARY STEEL, LOW-ALLOY STEEL OR CAST IRON.
3. If no reaction occurs, the material is CHROMIUM-IRON STAINLESS STEEL.

Procedure B

For Slightly Magnetic Materials:

Place a drop of concentrated nitric acid on a cleaned area.

1. If the acid reacts to a green-blue color, MONEL is indicated.
2. After reaction has ceased, add one or two drops of water, immerse an iron nail or steel knife blade in the drop and in contact with the test sample. If the nail or knife blade becomes coated with copper, or if a copper deposit appears on the material being tested, the latter is MONEL.
3. If no reaction occurs, the material is heavily cold-worked CHROMIUM-NICKEL STAINLESS STEEL.

Procedure C

For Non-Magnetic Materials:

Place a drop of concentrated nitric acid on a cleaned area.

1. If the acid reacts rapidly to a blue-green color, the material is NICKEL SILVER OR COPPER NICKEL.

Figure 62—Simple tests for identifying metals. (Sheet 7 of 8.)

2. If the acid reacts to a green-blue color, the material is "K" MONEL or "S" MONEL. The form of the material will usually assist in identification since "K" Monel is never cast and "S" Monel is never wrought.

3. If the acid reacts to a brown-black color, the material is NI-RESIST.

4. If no reaction occurs, the material may be either Inconel or chromium-nickel stainless steel with or without molybdenum.

To Distinguish Between Inconel and the Stainless Steels:

(a) Place on the sample a few drops of a solution containing 10 gm. of cupric chloride ($CuCl_2$–$2H_2O$) in 100 cc. of concentrated hydrochloric acid and allow it to stand for 2 minutes. Then slowly add a few drops of water, one drop at a time, and finally wash off the solution. If a copper-colored spot remains, the material is CHROMIUM-NICKEL STAINLESS STEEL with or without molybdenum; if an uncolored etched spot remains, the material is INCONEL. Or

(b) Place 1 drop of concentrated hydrochloric acid on a clean surface of the alloy and allow it to react for 1 minute. Then add 1 drop of an acid ferricyanide solution containing 1 percent by weight of potassium ferricyanide, $K_3Fe(CN)_6$, and 10 percent by weight of sulfuric acid. If a dark blue color appears quickly, the material is CHROMIUM-NICKEL STAINLESS STEEL with or without molybdenum; if no color develops it is INCONEL.

(c) A distinction may be made between the types 316 and 317 stainless steel, which contain molybdenum, and the chromium-nickel types 302 and 304. The test is made by immersing the alloy in an aqueous solution containing 75 percent by weight of orthophosphoric acid (H_3PO_4) and 1 to 30 gm. per liter of sodium chloride (common salt) at 140° to 200° F. If the stainless steel does not contain molybdenum (Types 302 or 304), bubbles of hydrogen will begin to form within 30 seconds. If the alloy contains molybdenum (Types 316 and 317), bubbles will not form. The quantity of sodium chloride and the testing temperature are not critical within the limits indicated.

Figure 62—Simple tests for identifying metals. (Sheet 8 of 8.)

cooling of the weld is not too rapid. For the larger size bars, best results generally require special end preparation, preheating of the bars, and slower cooling of the final weld as well as selection of the proper electrode. Several types of end preparation recommended for the larger size bars are illustrated in figure 63, and one of these should be used if complete fusion with 100 percent penetration is required to maintain a specified joint efficiency. The desirability or necessity of preparing the ends of large bars is determined by the designer on the basis of space limitations of the installation and joint efficiency requirements. Where no special end preparation is used, heavy weld-metal reinforcement should be applied by one of several approved methods, such as scarfing the joint for a short distance on each side of the weld. These methods will generally develop joint efficiencies of 90 percent or better.

To prevent embrittlement of the weld deposit in the high-carbon steels through the heat-dispersing action of the bar itself, preheating to a temperature of about 400° F. is desirable. Under adverse conditions, it may also be necessary to post heat the bar, but under normal conditions wrapping the finished weld with a protective insulating cover will generally provide sufficiently slow cooling to obtain adequate ductility. In applying external heat to the bars, the temperature reached may be determined by the use of commercially available temperature indicating markers. Heating the bars for a distance of 6 to 10 inches on either side of the joint will normally give adequate preheating capacity.

In installations which require a large amount of joining of reinforcing bars, such as the hoops on a canal siphon, the use of some automatic means of welding the bars will be warranted. The two automatic processes generally used are flash welding and pressure welding, neither of which requires the use of an electrode. In the flash process the passage of a high current through the bar at the instant of contact between the two ends to be joined creates an arc which produces a layer of molten metal. This fuses the ends of the bars when they are pressed together.

Pressure welding accomplishes the same results as flash welding. A gas flame provides the means of bringing the ends of the bars to a highly plastic state, whereupon the pressure of pushing the two ends of the bars together causes fusion to taken place. As compared with the flash-welding process, the pressure-welding method requires a greater extent

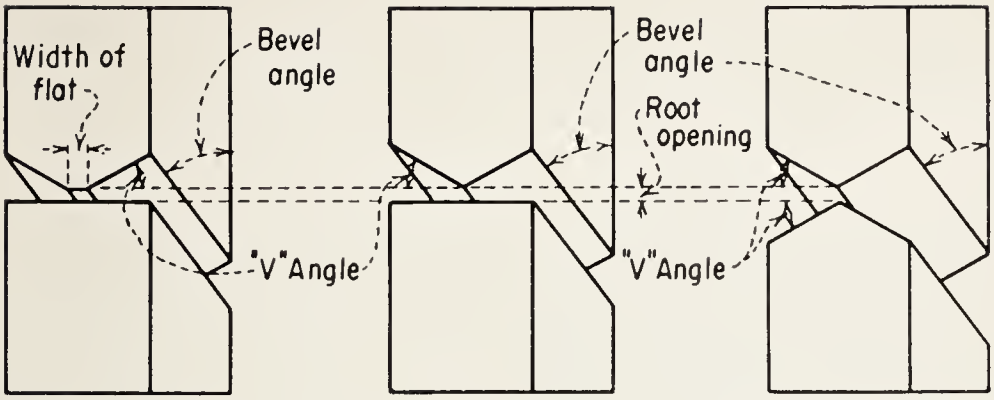

TOP "V" FLAT WITH BEVEL (a)

TOP "V" WITH BEVEL (b) Preferred

TOP & BOTTOM "V" WITH BEVEL (c)

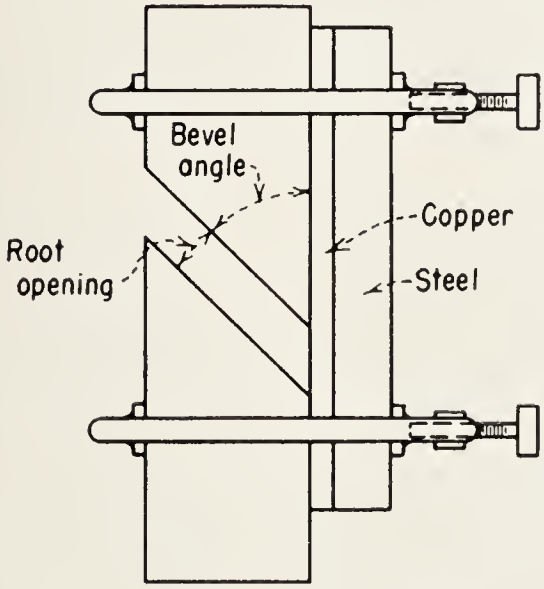

NO "V" WITH BEVEL
Showing clamping arrangement with back-up strips
(d) Preferred

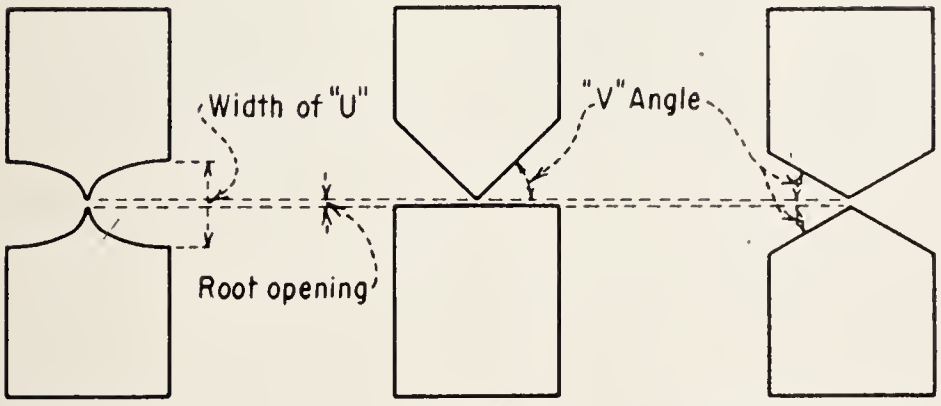

DOUBLE "U" WITHOUT BEVEL (e)

TOP "V" WITHOUT BEVEL (f)

TOP & BOTTOM "V" WITHOUT BEVEL (g)

Figure 63—End preparation for larger-size reinforcement bars.

of heated ends providing a larger degree of upset; however, it is much less sensitive to variation in control than the flash process. Figure 64 illustrates a flash-welded reinforcing bar and a typical pressure-welded reinforcing bar. When prop-

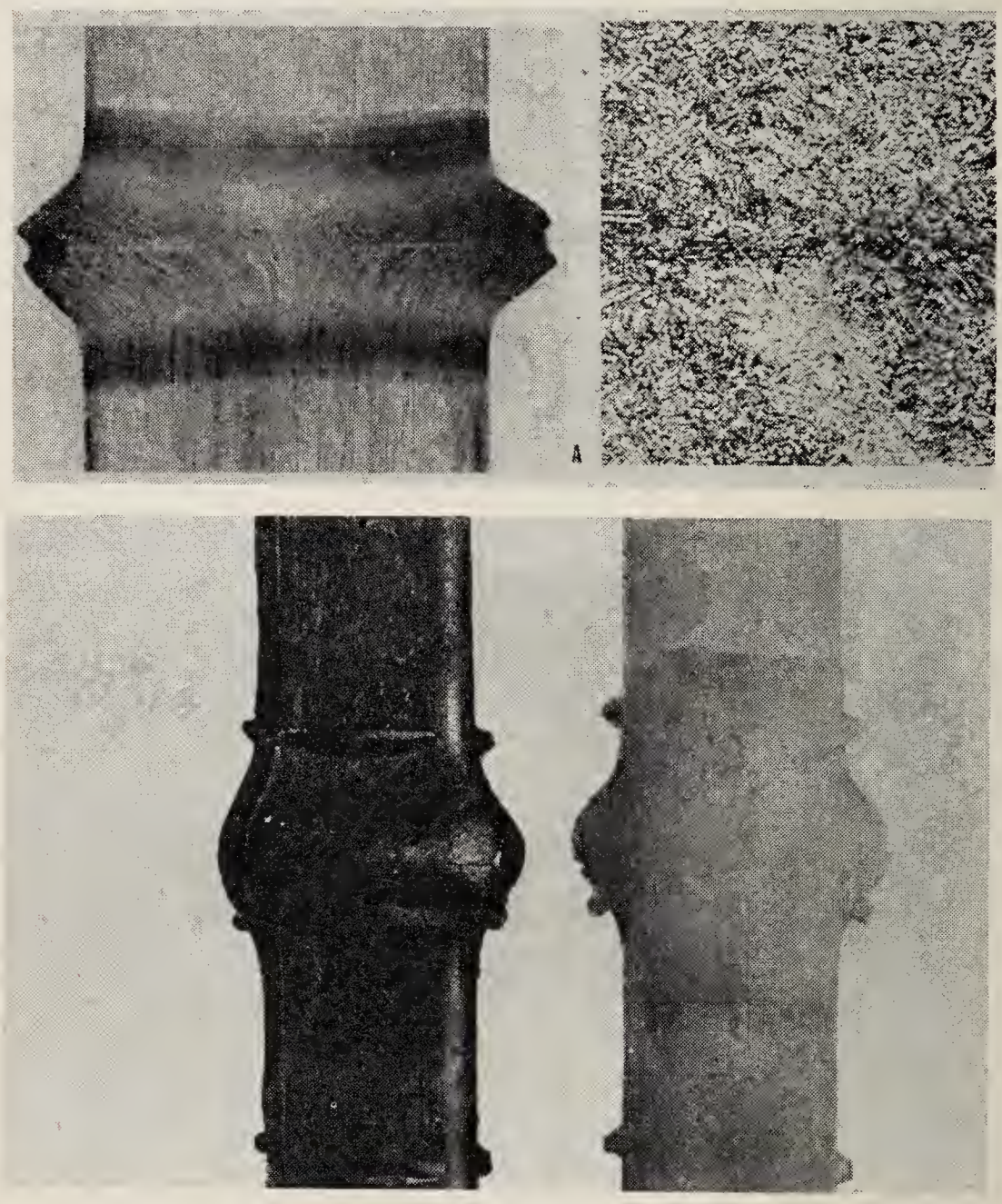

Figure 64—General appearance of flash-welded rod (top) and pressure-welded rod (bottom). Note extent of heat effect and thorough merging of ends of both rods at plane of contact.

erly made, the automatic process can produce dependable joint efficiencies of 95 percent or better. In addition to correct timing and adjustment of the automatic equipment to obtain the required amount of heat, the ends of the bars should be properly prepared and cleaned to prevent oxides or dirt from being entrapped in the joint.

47. Welding Stainless Steel.—The Bureau does not use a great quantity or variety of the so-called stainless steels. However, these materials find some engineering applications on control gates and valves and on expansion-joint water stops between concrete structures. Also, some architectural application may be made of various types of stainless steels. The term "stainless steel" is generally applied to any of over 100 ferrous alloys which are more or less resistant to various corrosive conditions. The main alloying constituent of all these steels is the element chromium which is present in all of the stainless types. Variations of these types are obtained by the addition of nickel and some minor elements. The most commonly known and widely used alloy of this type is the 18-percent chromium, 8-percent nickel steel.

The large number of stainless steel alloys may be separated readily into three metallurgical groups. In general, the straight chromium stainless steels range from 14 to 30 percent in chromium content and can be classed either as martensitic or ferritic, depending on the percentage of chromium and carbon involved in the alloy. These steels are distinguishable from the austenitic types, which contain 8 percent or more nickel along with the chromium, in that the martensitic and ferritic types are magnetic while the austenitic types are nonmagnetic. Thus a simple field test can readily be used to separate one from the other. Another distinguishing physical characteristic is that the former two types can be heat-treated; that is, they can be hardened through a thermal process, whereas the austenitic types can only be hardened through cold working processes. The American Iron and Steel Institute (AISI) designates these various stainless steels by code numbers, applying the 400 series of number designations to the straight chromium types and the 300 series designations to the chromium-nickel alloys, or austenitic types.

(*a*) *Straight Chromium (400 Series) Types.*—The 400-series steels are used mostly for their hardening properties. The 12- to 16-percent chromium steels are the ones most used by the Bureau and are produced in most degrees of hardness by the addition of 0.15 to 0.40 percent carbon. When it is necessary to weld such steels in the field, their physical characteristics can only be restored by proper heat treatment of the welded areas.

The Bureau has made considerable use of type 410 stainless steel for such purposes as rollers, pins, and links on coaster gates, and also as spring seals on roller gates. Stainless

steels of this type, from the standpoint of welding or joining, have the following physical properties:

(1) Lower coefficient of expansion than mild steel.

(2) Thermal conductivity one-half to two-thirds that of mild steel.

(3) Electrical resistance three to five times that of mild steel.

(4) Magnetic characteristic.

(5) Decided air-hardening properties, depending on carbon content.

Knowing these basic physical properties of the type 410 stainless steels, it is possible to work out practical welding procedures as the occasion requires. Electric-arc electrodes are available with various chromium contents to suit the particular alloy to be welded. The effect of the high electrical resistance of this material is accounted for by the manufacturer in that the electrodes are shorter in length in order to reduce resistance heating. The low thermal conductivity of stainless steels, as compared with that of mild steel, requires welding currents to be more carefully controlled in order that burn-through or overheating may not occur. This is particularly necessary when welding thin sections such as spring seals or expansion-joint materials. The air-hardening characteristic is quite apt to cause trouble unless some means is available to control the rate of cooling of a welded section. Preheating by the generally accepted methods to counteract the air-hardening effect is effective. Temperatures in the range of 300° to 500° F. may be used satisfactorily, although higher temperatures, up to 800°, cause no harm. Slow cooling must still be used even though preheating is applied. Where field welding does not permit the use of an annealing furnace, other means must be employed to prevent excessive hardening of a welded joint.

Where operating conditions permit, stainless electrodes of the 18–8 composition may be used quite satisfactorily for welding the straight chromium steels. Welds made with such electrodes are not generally susceptible to too rapid cooling and in some cases may be formed without preheating the parent metal.

(*b*) *Austenitic (300 Series) Types.*—The austenitic, or 300-series stainless steels, from a welding standpoint have the following general physical properties:

(1) Coefficient of expansion 50 percent more than mild steels.

(2) Thermal conductivity one-half to two-thirds that of mild steels.

(3) Electrical resistance six to nine times that of mild steels.

(4) Nonmagnetic characteristic.

(5) Non-air-hardening characteristic.

(6) A melting temperature approximately 200° F. below that of mild steels.

In view of these characteristics and the fact that the austenitic-type stainless steels are most often applied by the Bureau as thin sheet metals both for engineering and architectural purposes, it will be readily recognized that difficulties may be encountered in welding these steels. Of particular significance is the fact that the thermal conductivity of the material and its melting temperature are lower than those of mild steel. A welding operator unfamiliar with these characteristics will generally produce excessive burning or overheating of the welded joints. The high coefficient of expansion will also create buckling and distortion between joints if the usual current settings are used. At least 20 percent less welding current is required than would ordinarily be used for mild steel. Both the high electrical resistance and the lower melting temperature of the parent metal and electrode make it necessary to give careful attention to welding procedure during arc welding of this type of metal.

Some austenitic stainless steels show a particularly undesirable characteristic, known as carbide precipitation, when subjected to temperature between 1,800° and 1,850° F. for any period of time. The phenomenon is caused by the strong affinity of the chromium for the carbon in the alloy, forming a chromium-carbide compound. This compound settles out or forms at the grain boundaries of the steel during the proper temperature range, which tends to rob the matrix of the steel of its corrosion resisting characteristics. Where such a steel has been joined by welding, carbide precipitation may cause relatively rapid corrosion in the area that meets the above conditions. This has been termed in field use as "weld decay."

Every precaution must be taken to overcome or alleviate this carbide-precipitation condition. One means is to maintain an exceedingly low carbon content in the alloy itself, thereby not making available carbon with which the chromium may combine. Another method is to employ a small percentage of columbium or titanium with the original alloy and the

electrode used. Such a procedure is known as "stabilizing the alloy." Another method is to cool a weld joint very rapidly in order that the precipitation may not have a chance to take place or proceed to any great extent.

(*c*) *Eliminating Weld Build-Up in Joining Stainless Steels.*—In the field the welding of stainless-steel expansion joints and water stops has disclosed that the heavy weld deposit occasioned during ordinary electric-arc welding creates a stiff joint owing to the piling up of the weld metal. Under flexure this thicker deposit will soon fail, as shown in figure 65. The usual means of overcoming this defect is to make the joint with a minimum amount of weld deposit. This may be ac-

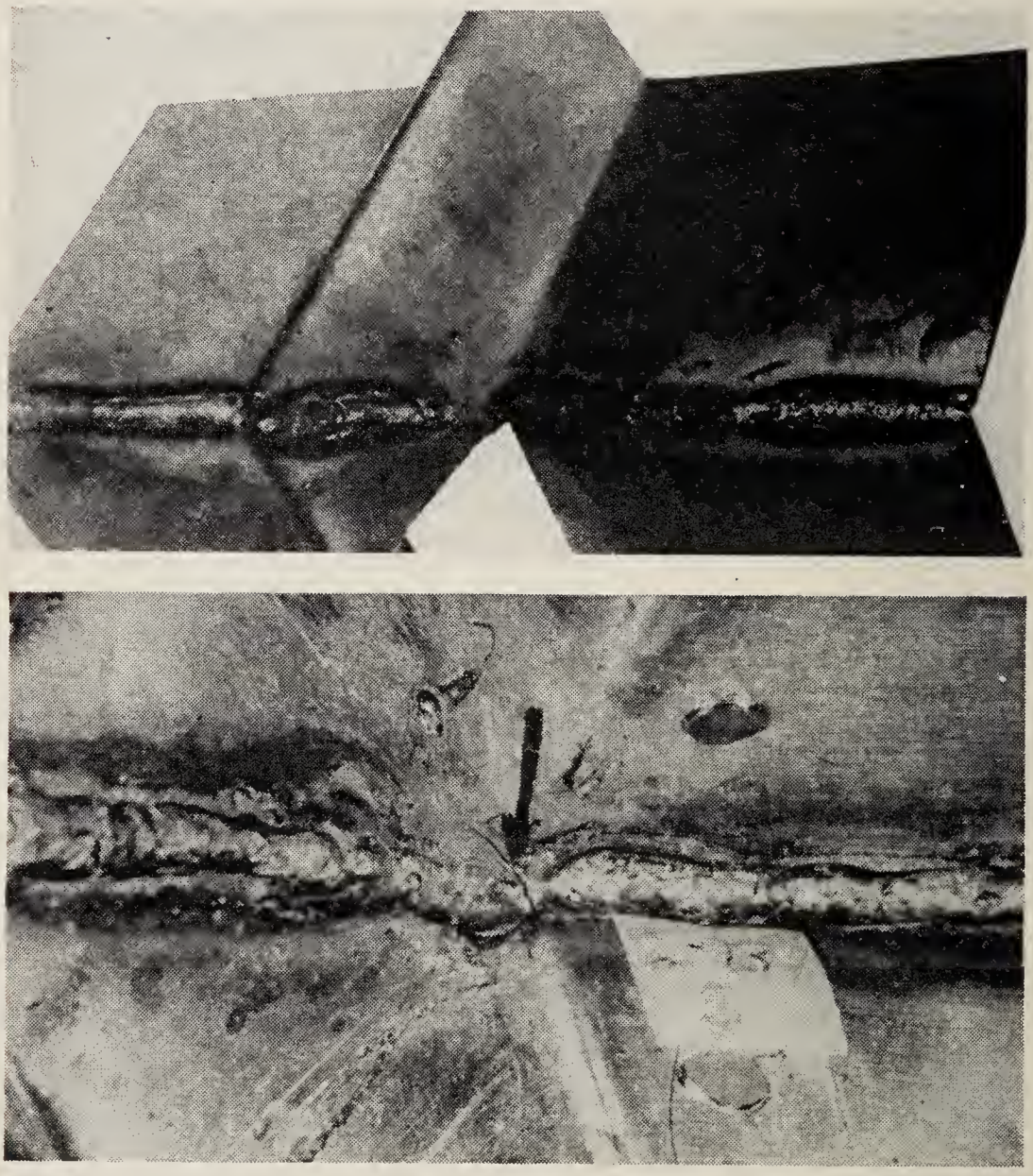

Figure 65—Arc-welded, V-type expansion joint showing heavy weld deposit on thin-gage steel material. Bottom view shows point of high stress and cracking due to extra thickness of weld.

complished by use of special welding methods such as inert-gas metal-arc welding or silver soldering.

In the inert-gas metal-arc welding process, an electric arc is formed between the parent metal and the electrode, which is entirely surrounded by a stream of inert gas such as helium or argon. As originally introduced, the process used a nonconsumable tungsten electrode, which is advantageous where weld deposits must be kept to a minimum. But to eliminate the inconvenience of adding filler rod when additional metal is needed, later equipment has been developed which can also

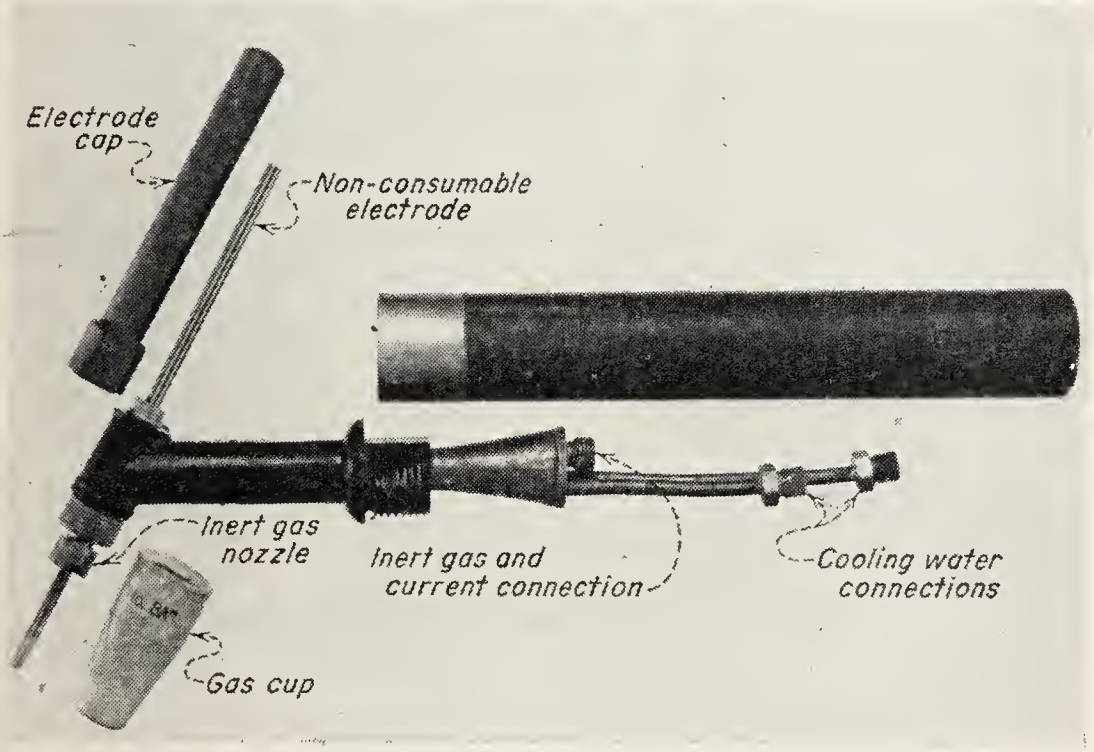

Figure 66—In the inert-gas process, argon or helium protects the weld puddle and the electrode, and the electric arc forms between the electrode and the work. In the arrangement shown the electrode is nonconsumable, any filler metal being added outside the arc proper.

use a bare consumable electrode. A typical electrode holder for inert-gas metal-arc welding equipment is shown in figure 66. As may be noted in the figure, the arc between the electrode and the base metal produces an intense local heat source which is confined by the inert gas surrounding it. The base metal to be joined by this method melts very rapidly in a small pool, and the inert-gas atmosphere serves as an insulating medium and usually eliminates the need for a flux.

Thin sheet metal, such as stainless steel used for expansion joints, can be welded by the inert-gas process with very little weld deposit showing. The method is also excellent for joining metals for architectural purposes because there is no

slag deposit and the small amount of heat discoloration and excess weld metal requires but little cleaning to remove. The special equipment required for inert-gas welding usually restricts its use in the field to those jobs on which considerable welding of this type is required.

Silver soldering is another method of joining stainless steel members where it is desired to avoid excessive weld deposits. Although it is not a fusion method, with proper care in preparation of the joint the strength of the joints will approach that of the parent metal. Silver soldering is done by means of a gas flame melting a silver alloy onto a flux-covered joint. Various types of alloy material are available with melting points ranging from approximately 1,125° to 1,300° F. Any of these alloys are satisfactory for use on stainless steels. The relative cost of the various types is usually the determining factor in selection of type.

In silver soldering it has been well established that the thinner the joining film is maintained the stronger will be the joint produced. Best results are usually obtained on work where the clearances are of the order of 0.001 to 0.003 inch. However, conditions may warrant larger clearances than these, especially when joining dissimilar metals. The low temperature of these joints on stainless steel eliminates the possibility of carbide precipitation present when arc welding is used. The joints produced by the silver-solder alloys, which have a tensile strength of the order of 60,000 pounds per square inch when properly made, are easily within the strength of the annealed sheet material normally used for expansion joint seals and architectural trim. In general, the various procedures which produce good joints by other means are also necessary for silver soldering. These are: (1) Good fit and proper clearance, (2) cleanliness of the metal, (3) use of proper flux, and (4) application of the proper amount of heat. The gas flame used as a heat source on stainless steel should be a neutral or slightly reducing type of flame. Figure 67 shows a silver-solder joint made by butt welding. Note the absence of weld build-up.

48. Monel Metal.—Monel metal is a copper-nickel alloy which has good corrosion resistance and is used in many applications in place of stainless steel. This metal has been used by the Bureau for expansion joint seals and for architectural purposes. It may be electric-arc-welded by use of proper types of electrodes quite readily, and strong joints may be formed with it by means of silver soldering. The central Bureau

Figure 67—Formed corner with straight sections attached by butt welding with silver solder. Note absence of build-up at joints.

laboratories have found that, in spite of the relatively high cost of the silver solder, the small amount generally required to produce proper joints makes it economically competitive with electric-arc welding.

49. Copper Silicon Alloy.—Another material which has been found to have excellent flexure characteristics and also good corrosion resistance is a copper silicon alloy. While this material has not been used extensively by the Bureau, it is very easily handled in the field where joining is required. It may be arc-welded quite readily or brazed with a gas flame using electrodes of the same composition. It may also be silver-soldered quite easily.

50. Copper.—Copper is used to some extent by the Bureau in water stops, grout stops, and flashings. This material is quite readily brazed and silver-soldered where joining is necessary. It also is readily soft-soldered with lead-tin alloys of various compositions. Where a gas flame is used to provide heat for joining on a material like copper, care must be exercised that the flame is not a reducing flame as the tendency for embrittlement and grain growth is promoted in a reducing type of atmosphere.

Various other miscellaneous nonferrous materials are used, such as terrazzo-floor dividing strips, which may require joining. Materials such as brass, copper, aluminum, and magne-

sium alloys have been used for such application. Joining of these materials is not more of a problem than joining of the more commonly used stainless steels and monel metals.

51. Joining Aluminum.—The use of aluminum in Bureau projects is not very common. The main applications of aluminum so far have been for transmission lines, electric appliances and fixtures, and to a minor extent as parting strips on terrazzo floors. In the general application, aluminum is either in the cast or wrought form. The alloys used may be divided into two classes, non-heat-treatable and heat-treatable alloys. The non-heat-treatable alloys derive their physical properties through addition of various types of alloying elements, the main elements being magnesium, copper, silicon, and zinc. The heat-treatable alloys can be given increased or more desirable physical properties through various types of heat treatment. Since most aluminum alloys can be joined by any of the commercial processes, it is generally necessary to know the form or type of the particular alloy in order to choose the proper type of joining process. The heat-treatable alloys will generally give the greatest trouble owing to the impairment of their physical characteristics during any of the fusion-type joining processes. Through the use of welding rods of similar composition to that of the parent metal, and by proper heat treatment after joining, the physical properties may generally be restored.

In Bureau work the alloys most likely to be encountered are of the high-purity types such as 2S, 3S, 53S, and 61S (non-heat-treatable). These metals may be arc-welded in thicknesses greater than 3/16 of an inch. In lesser thicknesses, use of electric-arc joining methods may cause considerable difficulty because of the overheating and burning out of the parent metal since it is difficult to control the current and rate of welding of such thin metals. Gas welding may be used on aluminum materials 0.032 inch or over in thickness, particularly where gas-tight welds are required. These materials should be preheated to a temperature of 500° to 700° F. to prevent cracking and reduce gas consumption due to the high thermal conductivity of aluminum.

The greatest difficulty encountered in welding aluminum is the failure of the deposited metal to adhere to the base metal. This is generally caused by the use of an improper base temperature or the selection or use of an improper flux. A flux is so prepared that the various oxides formed on aluminum are removed by chemical action. Since the various aluminum

alloys produce oxides with differing characteristics, the use of the proper flux cannot be stressed too highly. Most fluxes used for aluminum are extremely corrosive and must be removed immediately upon completion of a weld. This can be accomplished by copious use of warm water or by neutralizing the remaining flux in a cold, dilute, nitric acid solution or a warm 5-percent sulfuric acid solution.

One of the easiest processes for joining the common types of aluminum is a brazing method using a high-silicon-bearing, low-melting aluminum alloy rod. The aluminum material to be joined is heated by a torch or by other means in the presence of a proper flux to a temperature slightly below the melting point of the parent metal but above the melting point of the filler material. The method is relatively inexpensive and can be employed on very thin cast material, and the resulting joint has high strength and very good corrosive resistance. Where strength is not of primary concern, a large number of solders and fluxes are available which can satisfactorily solder aluminum. Because of the compositions of the solders and the inherent possibility of corrosive action in outdoor and other corrosive media, careful consideration of such joining processes is required and the use of protective coatings should be considered.

Of the heat-treatable alloys, the ones most likely to be encountered in Bureau work are the 17S and 24S alloys. These may be readily arc-welded. The gas-welding process may be used but will give trouble due to the embrittling effect of bringing these alloys within a certain temperature range. Where warranted, the best results of joining these materials is obtained through use of the inert-gas-shielded arc-welding process. In most cases no filler metal is required, and the elimination of the requirement for a flux provides more corrosion-resistant welds and necessitates less cleaning after welding. Another particular advantage of this process is that the technique requires a minimum of training in order to produce high-quality welds.

Aluminum alloy castings may be repaired or joined using the same welding techniques as for aluminum sheet or wrought sections. However, aluminum castings, owing to their high thermal capacity and conductivity, are quite susceptible to strains and cracks during the welding process. Consideration of this condition will generally call for preheating to between 500° and 700° F. prior to welding. Cast aluminum should be heated slowly and uniformly to prevent cracks forming in the

area nearest the application of the flame. For welding ordinary castings, a 5-percent silicon or a 4-percent copper 3-percent silicon alloy is generally used. Where it is possible to determine the alloy of the particular casting, filler rod of that composition is preferable. Here again, use of the proper flux is important in obtaining sound welds. In the welding of aluminum castings the carbon arc produces welds free of oxide and porosity and, where available, is preferred over the metal-arc process.

CHAPTER VII—SURFACING AND METALLIZING

52. Welded Surfaces.—The material used in the original parts of certain mechanical equipment is not always entirely suitable for operations when subjected to severe metal-to-metal wear, corrosion, or cavitation. Under such conditions, severe erosion of metal parts can occur, requiring extensive repairs. In making these repairs, materials more resistant to the particular conditions may be applied on the original metal by welding. Materials which have been found to be quite suitable for this purpose are stainless steels of the high chromium-nickel types, hard-carbide-type alloys, and some corrosion-resistant nonferrous alloys, notably hard aluminum bronze.

In general, the application of the various types of stainless-steel electrodes to restore wearing surfaces requires practically the same procedures and techniques as used in joining metals of various kinds with these electrodes. Since these welding electrodes are relatively expensive, if the repair requires the application of considerable filler metal it has been found economical to apply mild-steel electrodes first and surface with the stainless-steel electrodes. In using such a method, care must be exercised that dilution of the final surfacing material does not occur. This can be done by making several passes of the final material in completing a particular weld repair.

Under conditions of extreme wear or cavitation, hard-facing materials have been found to be extremely effective. However, the application of these carbide-type alloys requires the exercise of proper technique by a welding operator experienced with the general behavior of the hard-facing material. In order to keep dilution with the base metal to the minimum possible, a minimum amount of heat should be applied during welding. Gas welding will provide better control of the heat input than electric-arc welding; and will also more readily provide thin layers of surfacing metal which will eliminate the requirement for excessive grinding to restore the original contours of the part. The normal requirements of preheating and postheating are generally sufficient for repairs made using weld metal of the same composition as the parent metal. In those cases where hard facings are applied on materials

with expansion and contraction properties differing greatly from those of the weld metal, cracking will be hard to avoid; also welding on base metals having a tendency to fume and evolve gases will tend to produce porous deposits.

An air-hardening type of aluminum-bronze alloy used as weld rod in varying degrees of hardness of deposited metal, has indicated very good abrasion resistance characteristics under conditions of accelerated laboratory cavitation tests. This particular alloy is easily applied and would be quite compatible with the parent metal on such equipment as bronze castings of pumps, hydraulic valves, and turbines. It is available in electrodes for arc welding.

An adaptation of the gas-welding method, known as spray welding, is available for repair of surfaces subject to erosive wear and cavitation or metal-to-metal sliding. This particular process involves the application by spraying of a surfacing layer of an extremely hard alloy on a properly prepared surface, the deposited material then being melted and fused into the parent metal by the application of a flame. The particular advantage of this process lies in the fact that a very thin, hard surface may be obtained, requiring very little or no finishing. It can be applied advantageously to original or unworn surfaces of new equipment without the removal of any of the original material.

Shown in table 7 is a list of several commonly used surfacing materials with their relative order of resistance to severe wear, abrasion, and cavitation conditions. The choice or use of a particular material for such application will generally be determined by the economics of the particular job. It should be kept in mind when carbide-type surfaces are applied that the reapplication of similar surfacing on top of them is extremely difficult and generally requires removal of the previous surfacing material. Other materials do not exhibit such difficulties.

53. Metallizing.—In building up worn areas of machine parts many conditions prevent the use of high-heat methods such as arc or gas welding or brazing. A means for applying additional metal where desired without the disadvantages and drawbacks attendant to other means has been developed and become known as metallizing. In metallizing, molten metal is sprayed onto a properly prepared surface by any one of several methods. In the most widely applied method, metal in wire form is passed through a gas flame and melted, and the molten metal is sprayed onto the surface to be coated by

means of an air jet. Deposition of metal in this fashion is basically a mechanical interlocking of microscopically fine particles.

Table 7—Relative resistance to cavitation of surfacing materials [1]

A. Carbide-type alloys [2] (hard facings):
   1. Stellite.
   2. Stoodite.
   3. Vascoloy.
   4. Colmonoy.
   5. Sprayweld.

B. Stainless steels:
   1. 17 percent Cr, 7 percent Ni Type 301.
   2. 18 percent Cr, 8 percent Ni Type 308.
   3. 25 percent Cr, 12 percent Ni Type 309.

C. Welding bronze:
   1. Ampcotrode 200.
   2. Ampcotrode 250.
   3. Ampcotrode 160.

[1] These materials have shown up best under laboratory tests. Their relative behavior under actual cavitation and erosive conditions may vary, but the above-listed materials are quite superior to others that have been tested. The A group is somewhat superior to the B and C groups, whereas there is not much difference between the B and C groups.

[2] Many other trade-name alloys giving extremely hard deposits are equally effective.

Metallized coatings are generally low in ductility and are porous to some extent. The latter characteristic has provided advantageous applications to those surfaces which can be lubricated and are not too highly loaded, such as shafts in various mechanical equipment. Figure 68 shows a stainless-steel coating being applied on a worn pump shaft by means of metallizing. Of late, considerable use is being made of the metallizing process for corrosion protection.

Any type of metal may be sprayed onto any other metal if the surface is properly prepared to provide the necessary mechanical bond. The preparation of a surface is of extreme importance and several methods are available for providing a suitable clean, roughened surface, the most common being sand and grit blasting. Where possible, a grit-blasted surface is preferred, but in many cases where large areas are to be metallized, a sharp gritty sand is more economical. Figure 69 shows some typical surfaces prepared by blasting with various

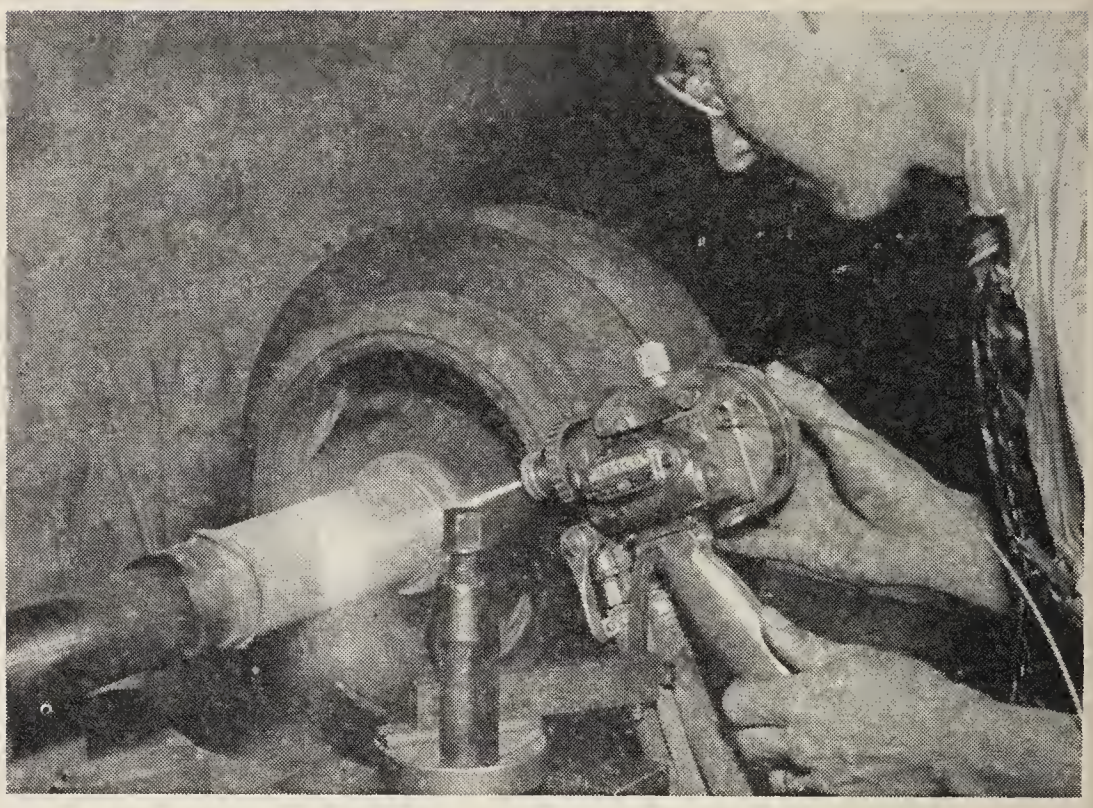

Figure 68—Stainless steel being sprayed onto a worn carbon steel shaft of a centrifugal pump.

Figure 69—Mild-steel plates blasted under identical conditions except for type of abrasive as follows: upper left No. 25 steel grit, upper right No. 50 sand, lower left No. 30 sand, lower right No. 16 sand.

materials. A medium roughened surface provides the best bond.

For smaller parts that can be turned and machined, other methods are available for roughening surfaces to be metallized. For example, coarse threading is commonly used to provide a proper surface on small shafts. The threads may be further roughened by use of a knurling-type tool, by grit blasting, or by passing a nickel-alloy electrode over the surface to cause arcing and minute deposits of weld metal on the surfaces of the thread. The electric-arc method is also used to roughen unfinished areas. Surfaces roughened by the electric-arc method should be coated with relatively thick deposits since the arc spatter is relatively heavy and nonuniform over the surface. The more elaborate methods of preparing surfaces for metallizing are used for parts that will be subjected to wear or load carrying.

One recent development for preparing surfaces for metallizing is the spraying of molybdenum metal onto a clean surface. The molybdenum coating provides a partially fused deposit which is sufficiently rough to furnish good bond for other sprayed metals. The method is particularly suitable for the building up of worn parts on large pieces of equipment which would be extremely difficult and expensive to dismantle and remove. Most types of metal obtainable for use as final coatings generally require little machining for final use. However, some extremely hard alloy coatings are occasionally applied which require finish grinding.

The metals most commonly used for corrosion protection are aluminum, zinc, and lead. Of these, zinc is the most predominantly applied. Sprayed lead is used only under those corrosive conditions which require that particular metal for best results. Since lead is highly toxic when sprayed, extreme precautions must be taken in its use to protect persons in the vicinity, and very good ventilation of the area is required. In the Bureau, zinc or aluminum coatings are normally used for all metal spraying for corrosion protection. It may be pointed out here that the use of highly corrosion-resistant metals such as stainless steel or copper alloy for the corrosion protection of other metals would normally not accomplish the intended purpose and in most cases would actually be harmful. It may be supposed, for example, that the spraying of stainless steel onto structural-steel members would provide good corrosion protection. However, since sprayed coatings are relatively porous

and stainless steel is cathodic to structural steel, the protection provided would be doubtful.

In table 8 are listed thicknesses of zinc and aluminum protective coatings for various life expectancies and exposures. These values are for normal conditions of corrosion and each particular application should be analyzed in the light of the particular service conditions and desired service life.

Table 8—Thicknesses and types of metallized coatings for various life expectancies and exposures

Exposure	Life expectancy in years					
	30 to 60	20 to 40	15 to 30	10 to 20	7 to 15	5 to 10
Rural atmosphere.	Zinc 0.010″ to 0.012″	Zinc 0.005″ to 0.007″	----------	Zinc 0.003″ to 0.005″	----------	
Industrial atmosphere.	----------	Aluminum 0.010″ to 0.012″ Zinc 0.012″ to 0.015″	----------	Aluminum 0.006″ to 0.008″ Zinc 0.006″ to 0.008″	----------	
Salt atmosphere	----------	----------	Aluminum 0.010″ to 0.012″ Zinc 0.012″ to 0.015″	----------	Aluminum 0.006″ to 0.008″	
Fresh water immersion	----------	----------	Aluminum 0.010″ to 0.012″ Zinc 0.012″ to 0.015″	----------	Aluminum 0.008″ to 0.010″ Zinc 0.008″ to 0.010″	
Salt water immersion	----------	----------	----------	Zinc 0.010″ to 0.012″	----------	Zinc 0.006″ to 0.008″.

One of the factors to be considered in the application of sprayed metal coatings is the tendency of all sprayed metals to shrink as they cool. How much they shrink will depend partly on the spraying technique and partly on the shrinkage characteristics of the particular metal or alloy used for spraying. For spraying with steel the shrinkage is inversely proportional to the amount of carbon; that is, a low-carbon steel will shrink much more than a high-carbon steel. Nonferrous metals also have varying shrinkage characteristics. Through experience it has been found that heavy coatings on fairly large diameters are more likely to crack than thin

coatings on small diameters. The application of metals with the lower shrinkage characteristics is necessary on larger jobs. Shrinkage may be alleviated to some extent by a careful check of the temperatures of the piece being coated. If the temperature rises much above the point where the operator can still hold his hand on the piece, spraying should stop until the temperature drops sufficiently.

BIBLIOGRAPHY

1. American Welding Society.
   Welding Handbook, 3d ed., 1950.
2. Lincoln Electric Company.
   Procedure Handbook of Arc-Welding Design and Practice.
3. Henry, O. H., Claussen, G. E., and Linnert, G. E.
   Welding Metallurgy, American Welding Society, 1949.
4. American Society for Testing Materials.
   Symposium on Radiography and X-ray Diffraction Methods.
5. ———.
   ASTM Standards, Including Tentatives, Part I–A, Ferrous Metals, 1949.
6. Camp, J. M., and Francis, C. B.
   The Making, Shaping, and Treating of Steel, 4th ed., 1936, Carnegie-Illinois Steel Corp.
7. Van Wert, Leland, and Russell, S. D.
   An Introduction to Physical Metallurgy, McGraw-Hill Book Co., 1936.
8. Doane, F. B.
   Principles of Magnaflux Inspection, Photopress, Inc.
9. American Society for Metals.
   Metal Handbook, 1948.
10. Lukens Steel Company.
    Steel Plates and Their Fabrication, 1947.
11. American Iron and Steel Institute.
    Manual of American Iron and Steel Institute, 1949.
12. Kaiser Steel Corporation.
    General Catalog.
13. Stiles, L. C., and Curry, D. H.
    Multiple Layer Submerged Arc-Welding of Pressure Vessels, Welding Journal, December 1950.

APPENDIX I—STEEL-MAKING PRACTICE

1. Introduction.—Familiarity with steel-making practices is necessary in order to produce practical designs based on materials generally available and on tolerances observed in the rolling of steel. Dependent on the method of deoxidation used during the solidification of the liquid metal, four types of carbon steels are generally produced. These are classified as killed, semikilled, rimmed, and capped steels. Each type is made for distinct purposes, and each has inherent advantages and charactertistics which determine its economic use.

Classified by chemical composition, two general types of steels are produced which are known as carbon steels and alloy steels, respectively. Carbon steels owe their properties principally to the presence of carbon without appreciable amounts of alloying elements. Carbon steel is also termed "ordinary steel," "straight carbon steel," or "plain carbon steel." Most alloy steels are low in carbon and derive their greater strength from certain alloying elements such as manganese, silicon, nickel, copper, chromium, and molybdenum.

2. Rolling Data.—Commercial steel is hot-rolled into structural shapes and plates. Flat-rolled steel products over 6 inches wide and ¼ inch or more in thickness, or over 48 inches wide and 3/16 inch or more in thickness, are generally classified as plates. Flat-rolled products 6 inches or less in width and 13/64 inch or more in thickness are called bars. Bars are available from many mills in all required thicknesses and lengths, in widths varying by half inches, and in thicknesses varying by sixteenths of an inch. Plate widths usually vary by increments of 1 inch, though ½-inch increments are obtainable; thicknesses vary by increments of 1/16 inch up to 2 inches, by ⅛ inch from 2 to 6 inches, and by ¼ inch over 6 inches. Sheared plates have all edges trimmed. Universal mill plates are produced with rolled edges and are sheared to length. Plates from sheared-plate mills are generally considered to have properties superior to those from universal mills.

Plates may be designated either by thickness in inches or by weight in pounds per square foot. Plates intended for pressure vessels and plates in excess of 2 inches in thickness, or weighing over 81.6 pounds per square foot, are customarily designated by thickness and should be ordered accordingly.

When ordering plates by weight, steel is assumed to weigh 489.6 pounds per cubic foot (or 40.8 pounds per square foot per inch of thickness). Specified thicknesses in inches will not customarily be within the standard tolerance of 0.010 inch; owing to rolling conditions, a plate increases in thickness toward the center. The overthickness tolerance is regulated by the permissible tolerance of overweight, the actual rolled weight generally being in excess of the theoretical weight. Plates may be ordered with specified maximum and minimum thicknesses but such orders are subject to negotiation. The permissible variations in weight and thickness of rolled-steel structural shapes and plates are given in standard specifications of the American Society for Testing Materials (ASTM). Widths and lengths of plates are usually expressed in inches. If the plates are for resquaring, suitable shearing allowances beyond normal variations should be provided. Permissible variations in length, width, flatness, and camber for plates are given in steel manufacturers' catalogs and in the manual of the American Institute of Steel Construction (AISC).

Steel plate has been developed with special qualities for many classes of service. The production of quality plate for a specific service calls for special manufacturing practices and additional metallurgical control and inspection procedures. Some special quality plates and their applications are as follows:

Structural quality plate—used for bridges, buildings, and miscellaneous structures.

Flange quality plate—used for pressure vessels and similar installations not exposed to fire or radiant heat.

Firebox quality plate—used for pressure vessels exposed to fire or radiant heat and subject to mechanical and thermal stresses.

Marine quality plate—used for pressure vessels and combustion chambers of marine boilers.

Hot-pressing quality plate—used for ordinary hot pressing, flanging, or bending work.

Cold-pressing quality plate—made of soft steel suitable for bending and forming at ordinary temperatures.

Drawing quality plate—produced from low-carbon steel suitable for drawing into identified forms.

Forging quality plate—intended for forging, heat treating, or similar purposes requiring uniformity of composition and freedom from injurious defects.

Plates are commonly conditioned by the producer for the removal of surface imperfections and depressions, in accordance with rules established by the industry. In general, the rules permit grinding or welding followed by grinding if the repairs are not detrimental to the use of the plate. Plates are sometimes pickled or blast-cleaned prior to surface inspection. This necessitates special surface conditioning and closer inspection than customarily employed, and the plates are processed as special-surface quality plate. If special tests such as macro-etch, impact, magnaflux, segregation and homogeneity tests (where not standard requirement) are required, they should be specified at the time of the original inquiry.

All plate is subject, during manufacture, to mill inspection and tests for control of quality and workmanship. Metallurgical test reports are furnished to customers, and all tests required to assure adherence to the specifications are made before the shipment is released.

3. Alloying Elements and Their Effects on Steel:

Iron is the principal element in steel and makes up the body of the steel. In commercial production iron always contains varying quantities of other elements. Production of pure iron is accomplished with difficulty and generally in small quantities. Pure iron does not have great strength, is soft and ductile, and can be appreciably hardened only by cold working.

Carbon, although not generally considered an alloying element, is by far the most important alloying element in steel. As carbon is added to steel up to about 0.90 percent, the steel's response to heat treatment and its depth of hardening increase. In the "as rolled" condition, increasing the carbon content increases the hardness, strength, and abrasion resistance of steel, but decreases its ductility, toughness, impact properties, and machinability.

Manganese makes it possible to roll hot steel by its chemical interaction with sulfur and oxygen. It is next in importance to carbon as an alloying element. It has a strengthening effect upon iron and also a beneficial effect upon steel by increasing the response to heat treatment. It increases the machinability of free machining steels, but tends to decrease the ductility of low-carbon drawing steels.

Silicon is one of the principal steel deoxidizers and is commonly added to steel for this purpose although in amounts up to about 2.5 percent it increases hardenability of the steel. Specified coarse-grain steels are silicon-killed. In lower carbon

electrical steels, silicon is used to promote the crystal structure desired in annealed sheets.

Chromium contributes to the heat treatment of steel by increasing its strength and hardness. Its carbides are very stable, and chromium may be added to high-carbon steels subject to prolonged anneals to prevent graphitization. Chromium increases resistance to corrosion and abrasion, and chromium steels maintain strength at elevated temperatures.

Vanadium is a mild deoxidizer and its addition to steel results in a fine grain structure which is maintained at high temperature. Vanadium has very strong carbide forming tendencies and very effectively promotes strength at high temperatures. Vanadium steels have improved fatigue values and excellent response to heat treatment. In unhardened steels vanadium is particularly beneficial in strengthening the metal.

Nickel is soluble in iron and, in combination with other elements, improves the hardenability of steel and toughness after tempering. It is especially effective in strengthening unhardened steels and improving impact strength at low temperatures. It is used in conjunction with chromium in stainless steels.

Copper in small quantities increases resistance to atmospheric corrosion; in larger amounts it increases strength and toughness.

Molybdenum has a pronounced effect in promoting hardenability. It raises the coarsening temperature of steel, increases the high-temperature strength, improves the resistance to creep, and enhances the corrosion resistance of stainless steels.

Aluminum has been used as an alloy in steels to promote nitriding but its major use in steel making is as a deoxidizer. It may be used alone, as in low-carbon steels where exceptional drawability is desired, or more commonly in conjunction with other deoxidizers. Aluminum effectively restricts grain growth and its use as a deoxidizer to control grain size is widely practiced in the steel industry.

Titanium is an extremely effective carbide former and is used in stainless steels to stabilize the steel by holding carbon in combination. It is used for special single-coat enameling steels. In low-alloy structural steels its use in combination with other alloys promotes fine grain structure and improves the strength of the steel in the "as rolled" condition.

Phosphorous strengthens steel but reduces its ductility. It improves the machinability of high-sulfur steels and under

some conditions may confer some increase in corrosion resistance.

Sulfur is added to steel to increase machinability. Because of its tendency to segregate it may decrease the ductility of low-carbon drawing steels. Its detrimental effect in hot rolling is offset by manganese.

GLOSSARY OF TERMS

4. Steel-Making Terms:

Pig Iron.—Produced from iron ores in the blast furnace. It is the basic product from which irons and steels are refined by the Bessemer, open-hearth, or electric-furnace process. Steel used for welding (except A 7 plates and shapes 7/16 inch thick and under for structures subjected to static loads only) is made either in the open hearth or electric furnace, both of which produce either basic or acid process steel. Practically all open-hearth steel is produced by the basic process, as a wider variety of raw materials may be used than with the acid process. The refining in the open-hearth furnace consists of removing carbon, phosphorus, and silicon by oxidation, sulfur by reaction with the slag, and suspended oxide material and gases by scrubbing. In the electric-arc furnace the initial charge consists of steel scrap of suitable physical and chemical properties, with the addition of small amounts of lime as required; after the steel is melted other materials are added to impart the desired properties to the steel. Four types of plain carbon steels are produced: Killed, semikilled, rimmed, and capped. Generally, all forging steels and steels containing more than about 0.25 percent carbon are killed; structural steels containing from 0.15 to 0.25 percent carbon are semikilled; and many steels with less than 0.15 percent carbon are rimmed.

Killed Steel.—The term "killed" indicates that the steel has been sufficiently deoxidized by the addition of ferrosilicon, aluminum, or other strong deoxidizers to produce a sound steel free from blowholes and segregation. The mold into which the killed steel is cast is provided with a refractory "hot top" in which the steel remains in liquid form longer than in the rest of the ingot. Thus the top forms a reservoir, keeping the ingot filled, and supplying steel to offset the normal shrinkage so that a solid ingot is produced. The hot top which absorbs the shrinkage is discarded as scrap. In making killed steel, the general practice is to bring the carbon content to the desired percentage and then tap the heat.

Semikilled Steel.—This class of steel is partially deoxidized. When solidified it has a slight rim with small blowholes close to the surface, which, however, are readily welded during rolling. Porosity in semikilled ingots is greater than in silicon-killed steel but less than in rimmed steel. In making this class of steel the heat is tapped at the desired carbon content and manganese is added either in the furnace or in the ladle. Silicon is added in the ladle as 50-percent ferrosilicon. If aluminum is used it may be added in the molds or in both the ladle and the molds.

Rimmed Steel.—This steel is partially deoxidized with manganese, used alone or with some other deoxidizer. During solidification, the top surface of the ingot is kept molten until a good sound rim has been formed. The rim consists of clean sound metal with high ductility which imparts superior surface qualities to the rolled product. There is very little piping in rimmed steel but porosity is increased.

Capped Steel.—Capped steel is somewhat similar to rimmed steel in structure and is interchangeable with this or with semikilled steel for some applications. In capped steel the controlled gas evolution is stopped shortly after the ingot is cast by freezing over the top of the ingot. Gas formed after the ingot is capped remains within the ingot and counteracts shrinkage during solidification.

Bloom, Slab, Billet, Sheet Bar.—Semifinished products, hot-rolled from ingots and rectangular in cross section with rounded corners.

Blooming Mill.—A mill used to a reduce ingots to blooms, billets, slabs, or sheet bars.

Acid Steel.—Steel melted in a furnace with an acid (siliceous) bottom and lining and under a slag which is dominantly siliceous.

Basic Steel.—Steel melted in a furnace with a basic bottom and lining and under a slag which is dominantly basic.

Bessemer Process.—A process of making steel by blowing air through molten pig iron contained in a suitable vessel. The process is one of rapid oxidation, mainly of silicon and carbon.

Blast Furnace.—A furnace for the production of pig iron in which the iron ore, coke, and limestone are placed and the ore is reduced by the burning of the coke and hot gasses introduced by the blast.

Blister.—A raised spot on the surface of metal caused by expansion of gas in a subsurface zone during heat treatment or chemical cleansing.

Blowhole.—A hole produced during the solidification of metal by evolved gas which, in failing to escape, is held in pockets.

Discard.—This term is used in steel mill practice and relates usually to the top portion of an ingot which is rejected to secure a finished product free from piping or other injurious unsoundness and free from undue segregation of chemical components.

Pipe.—A cavity formed in metal (especially ingots) during the solidification and contraction of the last portion of liquid metal.

Rollings.—A process by which plates are produced either from slabs or direct from ingots. Prior to rolling, ingots are heated in soaking pits (for medium carbon steels to approximately 2,250° to 2,350° F.). Hot working by rolling improves the physical properties of the steel in the ingot, and a finer grain structure is obtained as the thickness is reduced.

As Rolled.—This refers to plates which are rolled from slab or ingot, with no heat treatment applied after rolling.

Hot Top (sink head).—A heat-insulated reservoir for excess metal on top of an ingot mold or casting mold which feeds the shrinkage of the ingot or casting.

Top End.—Top end of a plate designates the end nearest the upper part of the ingot.

Sheared Plates.—The term "sheared plates" or "sheared mill plates" applies to plates rolled between straight horizontal rolls with all edges trimmed. The slab used for these plates is generally rolled in two directions or "cross-rolled" where certain physical properties are desired in both directions.

Universal Mill Plates.—These plates are rolled between straight horizontal and vertical rolls in which the width is controlled. Only the ends are trimmed.

Open Hearth.—A furnace for the manufacture of steel using gaseous fuel and preheated air. The process is one of oxidation of impurities.

5. Heat Treatment of Steel:

Annealing.—This process consists of heating the metal to a point slightly above the critical range, holding it at this temperature for a proper period, and cooling it slowly. The purpose of this heat treatment is to remove stresses, increase ductility by softening, and change the grain structure.

Bright Annealing.—A process of annealing, usually with reducing gases, such that surface oxidation is reduced to a minimum, thereby yielding a relatively bright surface.

Box Annealing.—Softening steel by heating, usually at a subcritical temperature, in a suitable closed metal box or pot to protect it from oxidation, employing a slow heating and cooling cycle; also called close annealing or pot annealing.

Carbonitriding.—A process in which a ferrous alloy is case-hardened by first being heated in an atmosphere of such composition that the alloy absorbs carbon and nitrogen simultanously, and then being cooled at a rate that will produce the desired properties.

Carburizing.—A process that introduces carbon into a solid ferrous alloy by heating the metal in contact with a carbonaceous material—solid, liquid, or gas—to a temperature above the transformation range and holding it at that temperature. Carburizing is generally followed by quenching to produce a hardened case.

Case Hardening.—A process of hardening a ferrous alloy so that the surface layer or case is made substantially harder than the interior or core. Typical case-hardening processes are carburizing and quenching, cyaniding, carbonitriding, nitriding, induction hardening, and flame hardening.

Controlled Cooling.—A process by which steel is cooled from a high temperature in a predetermined manner to avoid hardening, cracking, or internal damage.

Cyaniding.—Surface hardening by carbon and nitrogen absorption of an iron-base alloy article or a portion of it. Cyaniding is accomplished by heating the article at a suitable temperature in contact with a cyanide salt, followed by quenching.

Decarburization.—The loss of carbon at the surface of steel which is subjected to high temperatures such as hot rolling, forging, or heat treating.

Hardening.—This consists of heating slightly above the critical range, then cooling by quenching in water, oil, or some other medium. It produces a fine-grain structure, extreme hardness, maximum strength, and minimum ductility.

Induction Hardening.—A process of hardening a ferrous alloy by heating it above the transformation range by means of electrical induction, and then cooling as required.

Nitriding.—A process of case hardening in which a ferrous alloy, usually of special composition, is heated in an atmosphere of ammonia or in contact with nitrogeneous material to

produce surface hardening by the absorption of nitrogen, without quenching.

Normalizing.—A process in which steel is heated uniformly to a temperature above its upper critical point, followed by cooling in still air at atmospheric temperature. It is used to obtain grain refinement and to produce a uniform crystalline structure.

Patenting.—Heating iron-base alloys above the critical temperature range followed by cooling below that range in air, or in molten lead or a molten mixture of nitrates or nitrites maintained at a temperature, usually between 800° and 1,050° F., depending on the carbon content of the steel and the properties required of the finished product.

Quenching.—A process of rapid cooling from an elevated temperature by contact with liquids, gases, or solids.

Spheroidizing.—A process of prolonged heating at a temperature just below the lower critical point followed by slow cooling, applied to carbon and alloy steel to produce maximum softness for machining and deep drawing purposes.

Stress Relieving.—A treatment which consists of heating the material to a temperature slightly below the critical range, followed by slow cooling. Its purpose is to reduce internal stresses caused by local heating as in fusion welding or flame cutting or by cold working as in rolling, bending, or straightening.

Temper Colors.—The colors which appear on the surface of steel when heated at a low temperature in an oxidizing atmosphere.

Tempering.—This treatment consists of heating hardened steel to a point below the critical range, holding this temperature for a sufficient period, then cooling in water, oil, or air. The strength, hardness, and ductility of the steel depend directly upon the temperature to which it is heated. It is generally used to relieve the strains induced by the hardening process.

6. Physical Properties of Metals:

Compressive Strength.—The maximum compressive strength which a material is capable of developing.

Elastic Limit.—The greatest stress which a material is capable of developing without a permanent deformation remaining upon complete release of the applied force.

Elongation.—In a tension test, elongation is the total amount of permanent extension of the gage length measured after the specimen has fractured. It is expressed as a per-

centage increase of the original gage length, as 25 percent in 8 inches, or 28 percent in 2 inches.

Endurance Limit (fatigue limit).—The maximum stress that a metal will withstand without failure during a specified large number of cycles of stress.

Fatigue.—A phenomenon of the progressive fracture of a metal by means of a crack which spreads under repeated cycles of stress.

Modulus of Elasticity (Young's modulus).—The ratio, within the elastic limit of material, of stress to corresponding strain or deformation.

Modulus of Rupture.—The ultimate strength or the breaking load per unit area of a specimen tested in torsion or in bending (flexure), as computed by the usual formulas using maximum torque or moment. It is equivalent to the tensile strength in tension.

Permanent Set.—Permanent deformation of a material.

Proportional Limit.—The greatest stress which a material is capable of developing without a deviation from the law of proportionality of stress to strain (Hooke's law).

Reduction of Area.—In a tension test, reduction of area is the difference between the original cross-sectional area of the specimen and the smallest area at the point of fracture, expressed as a percentage of the original cross-sectional area.

Strain.—The change per unit of length in a linear dimension of a body, which change accompanies a stress. Strain is measured in inches per inch of length or in percent.

Stress.—The intensity (measured per unit area) of the internal distributed forces or components of force which resist a change in the form of a body. Stress is measured in pounds per square inch (p. s. i.).

Tensile Strength.—The maximum tensile force per unit area which the material is capable of developing in a tension test, in which a full section or a machined specimen is broken by applying an axial load to the two ends sufficient to pull the specimen apart.

Yield Point.—The stress in a material at which there occurs a marked increase in permanent deformation (strain) without an increase in applied load. The yield point may be determined by the "drop of beam method" or the "dividers method."

Yield Strength.—The stress at which a material exhibits a specified limiting permanent set.

7. Physical Tests of Metals:

Etch Test.—Because of the lack of standardization of procedure and the interpretation of test results, the macroscopic etch test as a basis for the acceptance or rejection of plates has not come into general use. When specified, such a test constitutes a restrictive requirement.

Gage Length.—This is the marked length over which elongation or extensometer measurements are made.

Hardness Test.—This test is sometimes employed to obtain a quick indication of tensile strength or of machining characteristics. Several methods are used for determining hardness, such as the Brinell, Rockwell, and Vickers methods. The Brinell method is usually used for testing carbon-steel plates and structural shapes.

Homogeneity or Nick-and-Break Test.—This consists of nicking a piece of metal transversely and breaking it for the purpose of disclosing, by visual examination of the fractured surface, such internal defects as piping or other unsoundness.

Impact Test.—This is a dynamic test in which a notched specimen is struck and broken by a single blow in a specially designed testing machine, which measures the energy in foot-pounds absorbed in breaking the specimen. The energy in foot-pounds is known as the impact value. The impact strength of steel is usually evaluated on the basis of an average impact value obtained from the test of three specimens. The test is intended as a comparison of the brittleness and notch sensitivity or notch toughness of metals. Among the several methods developed for the test, the Charpy and Izod methods are most widely used, the former using a keyhole notch and the latter a V-notch.

Longitudinal Test.—Unless specifically defined otherwise, this term applies to a test in which the lengthwise axis of the specimen is in the direction of the greater rolled extension of the plate from which the specimen was cut. The load applied in testing tension specimens is likewise in the direction of the greater rolled extension of the plate, and the fold of the bend-test specimen runs crosswise (transverse) to the greater rolled extension.

Rockwell Hardness Test.—The measure of the hardness of a substance by determining the depth of penetration of a penetrator into the specimen under certain arbitrary fixed conditions. The penetrator may be a steel ball or a diamond spherocone.

Segregation Tests.—Segregation is the result of the solidification of a steel ingot in which various components of the steel having the lowest freezing points are concentrated in parts of the ingot that solidify last. The amount of segregation that may be permitted in plates of the various qualities depends on the methods of fabrication and the service of the finished product. ASTM specification A 285–46 includes checks on the control of segregation which are customary standards for the higher quality plates. Bend test specimens are taken at the top middle portion of plates. The extra tension test specimen taken at the upper corner of firebox quality plates may also be used for check analysis. Phosphorus and sulfur limits are more restrictive than are permitted for structural quality plates.

Transverse Test.—Unless defined otherwise, this term applies to a test in which the lengthwise axis of the specimen, as well as the load applied in tension testing, is at right angles (transverse) to the greater rolled extension of the plate from which the specimen was cut, and the fold of the bend-test specimen runs parallel (longitudinal) to the greater rolled extension.

Speed of Testing.—This may be defined in terms of relative movement of the heads of the testing machine, in terms of rate of stressing the specimen, or in terms of rate of straining the specimen. The speed of testing should not be greater than that at which load and other readings can be made with the desired degree of accuracy. For carbon-steel plates and structural shapes, any convenient speed of the crosshead may be used from the start of loading the specimen until a value of one-half of the estimated yield point is reached. After this, the speed of the crosshead under load should be adjusted so that its rate of travel will not exceed 1/16 inch per minute per inch of gage length. This speed should be maintained through the yield point or yield strength. Beyond this point, the crosshead speed may be increased but should not exceed 1/2 inch per minute per inch of gage length.

Lamination Test.—If, in the radiographic inspection of a welded joint made in plates of ordinary firebox or higher quality steel, a rejectable lamination is disclosed and it is further proved by chipping that it extends into the plate adjacent to the weld, the plate is subject to rejection. The same also applies to laminations disclosed by etch test examination in the plate adjacent to the weld, provided the plates were ordered to meet an etch test requirement. A rejectable lami-

nation is one which when explored by chipping results in a splitting of the chip.

8. Miscellaneous Terms:

Age Hardening.—A process of aging that increases hardness and strength and ordinarily decreases ductility. It usually follows rapid cooling or cold working.

Air Hardening.—Cooling in air from above the critical temperature will tend to harden high-carbon and alloy steels, especially in thick sections, but will not have much effect on plain carbon steels.

Alloy.—A substance that has metallic properties and is composed of two or more chemical elements, of which at least one is a metal.

Alloying Elements.—Chemical elements constituting an alloy, in steels usually limited to the metallic elements added to modify the properties of steel.

Alpha Iron.—The form of iron that is stable below 1,670° F. and is characterized by a body-centered cubic crystal structure.

Amorphous.—Noncrystalline.

Austenite.—A solid solution in which gamma iron is the solvent, characterized by a face-centered cubic crystal structure.

Bend Tests.—Various tests to determine the ductility of plate subjected to bending.

Blasting.—A process for cleaning metal by use of an air blast that blows particles of abrasive materials such as sand, steel grit, or shot against the surface to be cleaned prior to coating.

Blue Annealing.—A process of softening ferrous alloys in the form of hot-rolled sheets, by heating in the open furnace to a temperature within the transformation range and then cooling in air.

Blue Brittleness.—Reduced ductility occurring as a result of strain-aging when certain ferrous alloys are worked between 300° and 700° F.

Brinell Hardness. A hardness number determined by applying a known load to the surface of the material to be tested through a hardened steel ball of known diameter. The diameter of the resulting impression is measured.

Brittle Fracture.—A fracture caused by brittleness in the metal (also called cleavage fracture).

Burning.—The heating of a metal so close to the melting point as to cause permanent injury, usually by segregation or oxidation.

Camber of Sheet.—Curvature in the plane of rolled sheet or strip.

Casting Strains.—Strains resulting from the cooling of a casting and accompanied by residual stresses.

Cast Structure.—The structure, on a macroscopic or microscopic scale, of a cast alloy that consists of cored dentrites and, in some alloys, a network of other constituents.

Cathodic Protection.—The use of a particular metal as cathode in the corrosion cell as a means of protecting that metal against electrochemical corrosion.

Caustic Embrittlement.—Embrittlement caused by the action of caustic soda upon steel under stress, as in a boiler.

Cavitation Erosion.—Damage to a material in contact with a moving liquid, associated with the formation and collapse of cavities in the liquid at the solid-liquid interface.

Cementation.—A process of introducing elements into the outer layer of metal objects by means of diffusion at high temperature.

Cladding.—A process for covering one metal with another, such as stainless steel or nickel over carbon steel.

Cleavage Fracture.—Synonymous with brittle fracture.

Cold Rolling.—Rolling of steel at low temperature to impart work hardness.

Cold Short.—The characteristic of metals that are brittle at ordinary or low temperatures.

Cold Shut.—A defect produced during casting of a molten metal, consisting of an imperfection where two surfaces meet that should have fused.

Cold Working.—Deforming a metal plastically at such a temperature and rate that strain hardening occurs.

Columnar Structure.—A coarse structure of parallel columns of grains, which is caused by highly directional solidification resulting from sharp thermal gradients.

Controlled Cooling.—A process of cooling from an elevated temperature in such a manner as to avoid hardening, cracking, or internal damage, or to produce a desired microstructure.

Cooling Curve.—A curve showing the relation between time and temperature during the cooling of a metal sample.

Cooling Stresses.—Stresses developed by uneven contraction or external constraint of metal during cooling.

Corrosion Embrittlement.—The embrittlement caused in certain alloys by exposure to a corrosive environment. Such material is usually susceptible to the intergranular type of corrosion attack.

Corrosion Fatigue.—The repeated cyclic stressing of a metal in a corrosive medium, resulting in a more rapid deterioration of properties than would be encountered as a result of either cyclic stressing or corrosion alone.

Creep.—The flow or plastic deformation of metals held for long periods of time at stresses lower than the normal yield strength.

Critical Temperature (critical point).—Synonymous with transformation temperature.

Crystal.—A physically homogenous solid in which the atoms, ions, or molecules are arranged in a three-dimensional repetitive pattern.

Cup Fracture.—The form of a fracture of a tension test specimen where the exterior portion is extended and the interior relatively depressed so that it looks like a cup.

Deep Drawing.—Forming cup-shaped articles or shells by using a punch to force sheet metal into a die.

Deep Etching (macro-etching).—Etching for examination at a low magnification, using a reagent that attacks the metal to a much greater extent than normal for microscopic examination.

Dentrite.—A crystal formed usually by solidification and characterized by a treelike pattern composed of many branches.

Deoxidizing.—The removal of oxygen from molten metal or the reducing of scale (oxide of iron) on the surface.

Ductility.—The property that permits permanent deformation before fracture by stress in tension.

Elastic Deformation.—Temporary changes in dimensions caused by stress. The material returns to the original dimensions after removal of the stress.

Ferrite.—A solid solution in which alpha iron is the solvent, and which is characterized by a body-centered cubic crystal structure.

Fiber Stress.—Local stress at a point or line on a section throughout which stress is not uniform, such as the cross section of a beam under a bending load.

Flakes or Cooling Cracks.—These are internal cracks or discontinuities which may occur in steel that has been improperly cooled. There are two theories as to their cause: (*a*) Cooling stresses are occasioned by a difference in temperature between the inside and outside of a billet, bloom, or ingot, and by hydrogen content; and (*b*) hydrogen is assumed to come out of solution at subcritical temperatures and to build up pressures that cause ruptures.

Flame Annealing.—A process of softening a metal by the application of heat from a high-temperature flame.

Flame Descaling.—A flame cleaning process for removing, by differential expansion, loosely adhering mill scale. Standard oxyacetylene torches with long extensions and special multiflame heating tips are used.

Flame Hardening.—A process of hardening a ferrous alloy by heating it above the transformation range by means of a high-temperature flame, and then cooling as required.

Fracture.—Synonymous with rupture.

Gamma Iron.—The form of iron that is stable between 1,670° and 2,550° F. and is characterized by a face-centered cubic crystal structure.

Grains.—Individual crystals in metals.

Graphitic Embrittlement.—Reduction in ductility of a metal or alloy, associated with the occurrence of graphite in the grain boundaries.

Graphitizing.—A heating and cooling process by which the combined carbon in cast iron or steel is transformed, wholly or partly, to graphitic or free carbon.

Hard Drawn.—Applied to a wire, rod, or tube that has been tempered by cold working.

Heat Treatment.—A combination of heating and cooling operations, timed and applied to a metal or alloy in the solid state in a way that will produce desired properties.

Homogenizing Treatment.—A heat treatment, usually for a long time at a high temperature, designed to make metal chemically homogeneous.

Hooke's Law.—A law applied to elastic materials which states that, within the elastic ranges, stress is proportional to strain.

Hot Quenching.—A process of quenching in a medium at a temperature substantially higher than atmospheric temperature.

Hot Shortness.—Brittleness in hot metal.

Hot Tear.—A defect formed in castings during the solidification stage, taking the form of worm holes or cracks.

Hot Working.—Plastic deformation of metal at such a temperature and rate that strain hardening does not occur.

Inclusions and Stringers.—Nonmetallic particles caused by deoxidation products or slag, which become entrapped during solidification. They are present in greater size and number in sulfurized steel.

Initial Creep.—The early part of the time-elongation curve for creep, in which extension increases at a rapid rate.

Intercrystalline Cracking.—Cracks or fractures that follow along grain boundaries in the microstructure of metals and alloys.

Laminations.—Defects resulting from the presence of blisters, seams, or foreign inclusions alined parallel to the worked surface of a metal.

Lueder's Lines.—Elongated markings or surface-of-flow planes that appear when some materials, particularly iron and low-carbon steel, are deformed just past the yield point.

Macrograph.—A photographic reproduction of any object that has not been magnified more than 10 times.

Macroscopic.—Visible to the naked eye or under low magnification (not over 10 diameters).

Macrostructure.—The structure of metals as revealed by macroscopic examination, under which it is visible with the naked eye or under a magnification not over 10 diameters.

Malleable Iron.—Cast iron which has been heat-treated in a malleablizing oven to relieve its brittleness. The process somewhat improves the tensile strength and enables the material to stretch to a limited extent without breaking.

Malleability.—The property that determines the ease of deforming a metal when subjected to rolling or hammering.

Malleabilizing.—An annealing of white cast iron to transform some or all of the combined carbon to temper carbon or to wholly remove it by decarburization. Malleabilizing improves resistance to impact and increases toughness and ductility.

Martensite.—An unstable constituent in quenched steel, formed without diffusion and only during cooling below a certain temperature known as the Ms temperature. Martensite is the hardest of the transformation products of austenite and is characterized by its acicular appearance on the surface of an etched specimen.

Mechanical Properties.—Properties often designated as physical properties.

Mechanical Working.—Subjecting metal to pressure by means of rolls, dies, presses, or hammers, to change its form or to affect its physical properties.

Melting Range.—The range of temperature in which a metal or alloy melts.

Metallography.—The science concerning the constitution

and structure of metals and alloys as revealed by the microscope.

Metal Spraying.—A process for applying a coating of molten metal under pressure on an object to be coated.

Microstructure.—The structure of polished and etched metal and alloy specimens as revealed by the microscope.

Mill Finish.—A surface finish produced on plates and sheets, characteristic of the ground finish on the rolls used in fabrication.

Mill Length.—Also known as "random length." The usual run of mill pipe is 16 to 20 feet in length. Line pipe and pipe for power plant use are sometimes made in double lengths of 30 to 35 feet.

Necking Down.—Reduction in area concentrated at the subsequent fracture when a ductile metal is tested in tension.

Notch Brittleness.—Susceptibility of a material to brittleness in areas containing a groove, scratch, sharp fillet, or notch.

Notch Sensitivity.—The reduction caused in nominal strength, impact or static, by the presence of a stress concentration, usually expressed as the ratio of the notched to the unnotched strength. Notch sensitivity of homogenous material is usually measured in terms of Charpy or Izod impact tests.

Notch Toughness.—A measure of the ability of a material to flow readily without cracking.

Nucleus.—The first structurally determined particle of a new phase or structure that may be about to form in the grain structure of a metal.

Operating Stress.—The stress to which a structural unit is subjected during service.

Ore.—A native mineral from which metal can be extracted profitably.

Overheated.—A term applied when, after exposure to an excessively high temperature, a metal develops an undesirable coarse grain structure but is not permanently damaged.

Pearlite.—The lamellar aggregate of ferrite and carbide.

Photomicograph.—A photographic reproduction of any object magnified more than 10 diameters. The term micrograph may be used.

Physical Properties.—Those properties familiarly discussed in physics.

Pickling.—Removing scale from a metallic surface by the use of acid, usually sulfuric.

Piercing.—Forcing a mandrel or punch through metal to produce a hollow tube or forging.

Pig Iron.—Iron produced by the reduction of iron ore in the blast furnace.

Pipe.—In metallurgy it designates a cavity formed by contraction in metal (especially ingots) during solidification of the last portion of liquid metal.

Pit.—A sharp depression in the surface of metal.

Plastic Deformation.—Permanent distortion of a material under the action of applied stresses.

Poisson's Ratio.—The ratio of the transverse contraction of a strained test specimen to its longitudinal elongation.

Porosity or Blow Holes.—These terms describe unsoundness produced during the solidification of a metal by evolved gas failing to escape and being held in pockets which elongate during rolling.

Powder Metallurgy.—The art of producing metal powders and of utilizing them for the production of massive materials and shaped objects.

Pressure-Tight.—A term that describes a casting free from porosity of the type that would permit leaking.

Principal Stresses.—Normal stresses along rectilinear coordinates that are so chosen in direction that shearing stresses are zero.

Proof Stress.—In a tension test, the stress that will cause a specified permanent deformation in a material, usually 0.01 percent or less. Also used in designating hydrostatic pressure tests of pipe installations to prove their safety for operation.

Radiography.—A nondestructive method of internal examination in which metal objects are exposed to a beam of X-ray or gamma radiation.

Recrystallization.—A process whereby the distorted grain structure of cold-worked metals is replaced by a new, strain-free grain structure during annealing above a specific minimum temperature.

Red Shortness.—Brittleness in steel when it is red-hot.

Refractory.—A heat-resistant material, usually nonmetallic, which is used for furnace linings and similar applications.

Reheating.—A thermal operation designed solely to heat the work back to hot-forming temperatures. In general, no structural changes are intended.

Scab.—A flat bead of metal caused by a rolled-in splash on the ingot surface.

Scarfing.—One method of removing seams and other surface defects with a gas torch, so that the defects will not be worked into the finished product.

Scleroscope Test.—A hardness test in which the loss in kinetic energy of a falling metal "tup," absorbed by indentation upon impact of the tup on the metal being tested, is indicated by the height of rebound.

Seam.—A crack in the metal surface which has been closed but not welded. These are caused by cracks in ingots, which have been elongated during rolling.

Season Cracking.—A term used in the copper industry for stress-corrosion cracking that involves only residual stresses and specific corrosive agents (usually ammonia or compounds of ammonia).

Secondary Creep.—The second portion of a creep curve, following the initial creep stage, in which the rate of creep has reached a rather constant value.

Secondary Hardening.—Tempering certain alloy steels at certain temperatures so that a hardness is obtained greater than that resulting from the tempering of the same steel at some lower temperature for the same length of time.

Selective Heating.—A process by which only certain portions of an object are heated.

Selective Quenching.—A process by which only certain portions of an object are quenched.

Self-Hardening Steel.—A steel containing sufficient carbon or alloying element, or both, to form martensite either through air hardening or, as in welding and induction hardening, through rapid removal of heat from a locally heated portion by conduction into the surrounding cold metal.

Shear Fracture.—A failure due to shear, also called a ductile fracture.

Shear Stress.—The component of stress acting on the plane of shear.

Shortness.—Brittleness in metal.

Shrinkage Cavity.—A void left in cast metals as a result of solidification shrinkage and the progressive freezing of metal toward the center.

Shrinkage Cracks.—Cracks that form in metal as a result of the pulling apart of grains by thermal contraction before complete solidification.

Silky Fracture.—A steel fracture that has a very smooth, fine grain or silky appearance.

Slag.—A product resulting from the action of flux on the nonmetallic constituents of a processed ore, or on the oxidized metallic constituents that are undesirable.

Skelp.—A plate of steel or wrought iron from which pipe or tubing is made by rolling the skelp into shape longitudinally and welding or riveting the edges together.

Slip Plane.—The crystallographic plane of slip in an individual crystal.

Sliver.—An elongated layer of metal loosely adhering to the billet and usually caused by elongation of surface tears in rolling.

Soaking.—Prolonged heating of a metal at a selected temperature.

Solidus Line.—A line on a binary phase diagram, or a surface on a ternary phase diagram, representing the temperatures at which freezing ends during cooling, or melting begins during heating, under equilibrium conditions.

Spinning.—Shaping of metals into a hollow form by pressing with a smooth hand tool or roller while the metal is being rapidly revolved.

Spiral Welding.—A method of manufacturing pipe by coiling a plate into a helix and fusion welding the overlapped or abutted edges.

Strain.—Deformation per unit length, expressed as a pure number or ratio.

Strain Aging.—Aging of a metal induced by cold working.

Strain Hardening.—Increasing the hardness and strength of a metal by plastic deformation at temperatures lower than the recrystallization range.

Stress.—The load per unit of area.

Stress-Corrosion Cracking.—Spontaneous failure of metals by cracking under combined action of corrosion and stress, residual or applied.

Surface Checking.—General breaking and cracking of a metal at the surface, which may result from overrolling, overforming, or atmospheric attack on grain boundaries.

Temper Brittleness.—Brittleness that results when certain steels are held within, or are cooled slowly through, a certain range of temperature below the transformation range. The brittleness is revealed by notched-bar impact tests at room temperature or lower temperatures.

Thermal Stresses.—Stresses in metal resulting from nonuniform distribution of temperature.

Thermocouple.—A device for measuring temperatures by

the use of two dissimilar metals in contact. The joining of these metals in a closed circuit gives rise to a measurable electrical potential that varies with the temperature at the junction.

Torsion.—Strain created in a material by a twisting action.

Toughness.—The property of absorbing considerable energy before fracture, involving both ductility and strength.

Transformation Temperature.—The temperature at which a metal undergoes a crystallographic change. The term is sometimes used to denote the limiting temperature of a transformation range.

Transition Point.—The temperature of transformation of a substance from one solid crystalline form to another.

Transition Temperature.—Temperature at which a steel becomes notch-sensitive.

Troostite.—Tempered martensite that etches rapidly, usually appears dark, and is not resolved by the microscope.

Undercooling.—Lowering the temperature of a molten metal below its liquidus during cooling. Also referred to as supercooling.

Upsetting.—Working metal so that the cross-sectional area is increased.

Welding Fittings.—Wrought- or forged-steel pipe fittings with ends beveled for butt welding to pipe.

Welding Stress.—The stress resulting from localized heating and cooling of metal during welding.

White Cast Iron.—Cast iron containing carbon in the combined form. The presence of iron carbide (Fe_3C) and cementite makes this metal hard and brittle, and the absence of graphite gives the fracture a white color.

Widmanstaetten Structure.—A structure characterized by a geometrical pattern resulting from the formation of a new phase along certain crystallographic planes of the parent solid solution. This type of structure is familiarly seen in cast steel and in overheated wrought steel that has been cooled rather rapidly, but it may occur in any alloy in which a phase change occurs.

Work Hardness.—Hardness developed in metal as a result of cold working.

Workability.—The characteristic that determines the ease of forming a metal into desired shapes.

APPENDIX II—WELDING METALLURGY

1. General.—Metals being welded undergo certain metallurgical changes due to the heat developed during welding. The rate of heating and cooling and the length of time the maximum temperature is maintained are, therefore, important factors in the welding process. Rates of temperature change are affected by the thickness of the metal to be welded and, if the metal is preheated, by the amount of preheating applied to the structure. Air temperatures, weather conditions, and other factors may also affect rates of temperature change.

Preheating reduces the rate of cooling after welding, and is beneficial, especially for heavy sections, for high-carbon steels and for certain alloy steels. Rapid cooling after welding produces a martensitic or troostitic structure in the fusion zone of the weld, a structure which makes this zone hard and brittle with a tendency to crack.

2. Crystal Theory.—The crystalline structure of a metal is influenced by the elements present and by temperature, and determines to a large extent the mechanical properties of the metal. The forces holding the atoms together in a crystal are affected by temperature, and the rate of growth of metal crystals from a melt usually is proportional to the rate of cooling. A change takes place in the crystalline structure of steel when the steel is heated above the critical temperature. This is usually about 1,400° F., the exact value being dependent on the carbon content. At this critical temperature, the metal undergoes a complete transformation. It becomes more ductile and changes into a solid solution of carbon or the carbide Fe_3C in iron. The crystalline form changes from a body-centered cubic space lattice to a face-centered cubic form with additional atoms. Iron in the latter form is called gamma iron (in the original form it is known as alpha iron), while the solid solution of carbon and iron is known as austenite. Heating above the critical temperature thus produces an entirely new crystalline structure and removes strains from all the grains.

The maximum grain refinement will result when the temperature is raised to a point just above the critical; for no matter how large the grains of ferrite and pearlite are, the grains of austenite will be of minimum size because the trans-

formation to austenite takes place at the lowest temperature at which austenite forms, a temperature unfavorable to grain growth. No further change in crystalline form takes place if steel is heated to a higher temperature, but the steel becomes weaker and more plastic and the grains grow in size. If the steel is now cooled normally, the size of the grains of the gamma iron determines the size of the grains of the alpha iron, as with slow cooling each grain of gamma iron apparently forms, at the critical range, a grain of alpha iron. There is a definite relation between grain size and temperature in this upper range. Working the metal in this range may result in considerable grain refinement, one of the factors determining the quality of steel. Small grains offer more resistance to deformation than large ones, and impart greater strength and toughness to the material. If the metal, after hot working, is reheated to a point above the finishing temperature, the grain refinement obtained by the working may be partly or entirely destroyed, depending on how far above the finishing temperature the second heating is carried. The structural nature of weld metal is that of a cast material, in general having a coarser grain structure than metal which has been wrought, either hot or cold.

3. Effect of Cooling.—The rate of heating has little effect on the structure to be welded, and the rate of cooling is important only if the metal undergoes a change in crystalline form while cooling. Since austenite is transformed into ferrite at temperatures below 900° C. (1,652° F.), the rate of cooling has no effect on the austenite crystals from the solidus temperature down to about 900° C. Below this temperature, however, the rate of cooling has a great influence on the structure of any steel. Experience shows that the cooling rates in the zones heated above the critical point during welding may be high enough to cause undercooling of austenite below 500° C. (932° F.) and the forming of martensite. A thin bead deposited between thick plates may create martensite in the heat-affected zone. Because weld metal is usually of lower carbon content than the base metal, it is less susceptible to martensite formation than metal in the heat-affected zone. However, apart from martensite, the more rapid the rate of cooling, the finer the pearlite that is formed.

Rapid cooling tends to embrittle steel: it increases shrinkage stresses and reduces distortion. Quenching of welded joints, therefore, hardens them and creates a structure of low ductility that is likely to crack in service. To prevent this, as well as

to insure against martensitic formation and reduce weld shrinkage stresses to a low value of 5,000 pounds per square inch, the welded structure may be stress-relieved after welding. This is especially important for alloy steels with air-hardening tendencies. In general, the higher the temperature from which the liquid metal is cooled, the larger will be the size of crystals in the weld. Overheating lowers the rate of cooling, tending to reduce the number of crystals.

4. Effect of Carbon.—The carbon content of steel will produce a greater variety of changes in its mechanical properties than any other element. Alloys of iron and carbon containing up to about 1.7 percent carbon are known as steels, and those containing more than 1.7 percent carbon as cast iron. Solid carbon is readily taken up by the molten iron to form a liquid solution. In solid irons, however, the state of carbon as an alloying element is rather complex because carbon can dissolve in gamma iron in appreciable amounts to form an interstitial solution, yet its solubility in alpha iron is very much restricted. The carbon which cannot enter into solid solution with the alpha iron, forms a compound for the most part rather than exists as some form of free carbon. This compound is iron carbide, Fe_3C, a material of very high hardness. Figure 70 illustrates the basic guide to ferrous metallurgy, as prepared by the Tempil Corporation of New York.

5. Theory of Failure.—The planes of a metal may fail under load either by slip as the planes move parallel to each other or by rupture when the planes pull apart. In most metal crystals, slip (or permanent deformation) occurs long before rupture when the load exceeds the elastic limit of the metal. Once slip has occurred on a plane, that plane is strengthened and further slip due to increased load is forced to occur on another plane. The increase in load required to bring successive slip planes into action is the origin of work hardening or strain hardening, in other words the hardening of a metal due to cold working. Eventually, so many planes of the crystal have undergone slip, that capacity for slip is greatly reduced and rupture occurs upon further increase in load. High resistance is indicated by ductile or shear fractures which absorb large amounts of energy and proceed slowly. Low resistance is indicated by brittle or cleavage fractures which proceed rapidly and absorb very little energy during their progress.

Grain boundaries resist slip because the crystal lattices in adjacent crystals are tilted with respect to each other. The angle between the lattices of adjacent crystals governs the

resistance to slip, which increases with increasing angle. The planes upon which slip occurs are visible under a microscope if the polished specimen is examined after plastic deformation but without repolishing. Etching attacks slip planes usually more deeply than unslipped metal and therefore reveals them.

Steady or static load up to the elastic limit of steel causes elastic deformation. Up to the proportional elastic limit the material follows Hooke's law, which states that strain is proportional to stress. The ratio of stress to elastic strain is called the modulus of elasticity, or Young's modulus. For iron or steel this is approximately 30,000,000 pounds per square inch (e. g., a load of 3,000 pounds per square inch produces an elastic strain of 0.0001 inch). While elastic deformation is recovered upon removal of the load, plastic deformation, produced when the material is stressed beyond its elastic limit, results in a permanent set.

6. Notch Effect.—All steel structures contain notches, imperfections, and incipient cracks which are potential sources of failure. Fracture under heavy load often originates during service at the base of a sharp fillet or notch where a stress concentration of two or three times the design stress may exist. The notch-toughness, or the resistance to failure of the notch subject to impact forces, is measured in foot-pounds. Either the Izod test using a 45° V-notch or the Charpy test with a keyhole-type notch may be used. When the specimen is struck with a blow of a pendulum during testing, biaxial stresses will develop at the base of the notch as the lateral contraction resulting from longitudinal tension at that point is counteracted by the metal above the notch. Under biaxial stress conditions plastic flow cannot take place in the normal manner and a crack is likely to develop. A crack is equivalent to an extremely sharp notch, hence is often followed by complete rupture. Because notches act as stress raisers, they are dangerous in metals and should be avoided. The conditions under which plastic flow will occur are even more complex when a third tensional stress is added causing triaxial stresses. Metals subjected to multiaxial stresses are apt to exhibit abnormally low ductility and may fail at very low loads. Stress concentrations produced in localized areas by notches and changes of section may develop a stress level which is considerably higher than the nominal value. If plastic flow is possible at such points, however, these localized stresses can be relieved and failure averted.

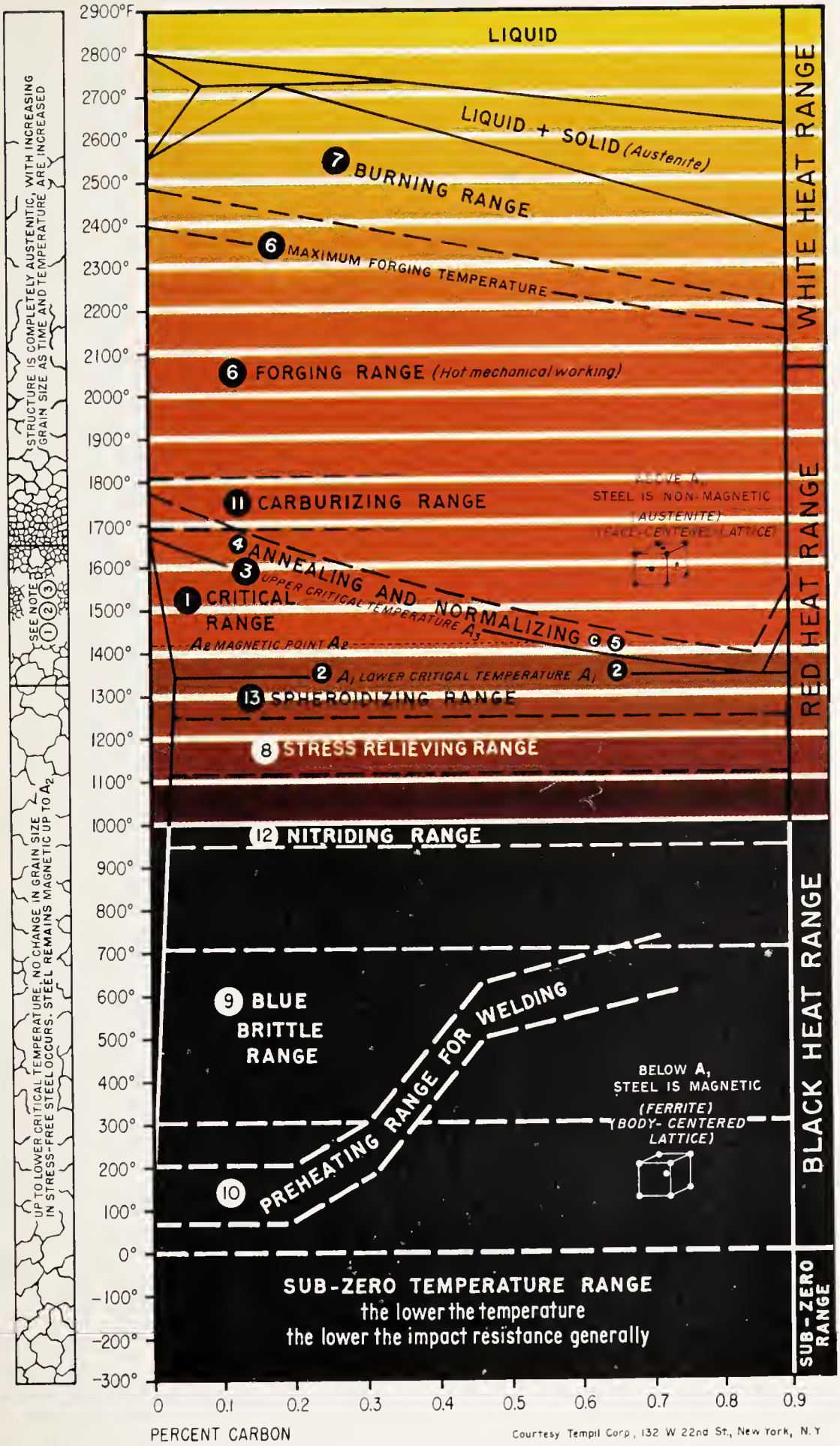

Figure 70—Basic guide to ferrous metallurgy.
(Sheet 1 of 3)

① **CRITICAL RANGE.** In this range, steels undergo internal atomic changes which radically affect the properties of the material.

② **LOWER CRITICAL TEMPERATURE** (A_1). Termed Ac_1 on heating, Ar_1 on cooling. Below Ac_1, structure ordinarily consists of FERRITE and PEARLITE (see 14 and 17 below). On heating through Ac_1, the solid FERRITE and the solid PEARLITE begin to dissolve in each other to form AUSTENITE (see 15 below) which is nonmagnetic. This dissolving action continues on heating through the CRITICAL RANGE until the solid solution is complete at the upper critical temperature.

③ **UPPER CRITICAL TEMPERATURE** (A_3). Termed Ac_3 on heating, Ar_3 on cooling. Above this temperature the structure consists of AUSTENITE which coarsens with increasing time and temperature. Upper critical temperature is lowered as carbon increases to 0.85% (eutectoid point).

④ **ANNEALING** consists of heating steels to slightly above Ac_3, holding for AUSTENITE to form, then *slowly* cooling in order to produce small grain size, softness, good ductility and other properties. On cooling slowly the AUSTENITE transforms to FERRITE and PEARLITE.

⑤ **NORMALIZING** is similar to annealing except that cooling is done *in still air.* On cooling, AUSTENITE transforms, giving somewhat higher strength and hardness and slightly less ductility than in annealing.

⑥ **FORGING RANGE** extends to several hundred degrees above the UPPER CRITICAL TEMPERATURE.

⑦ **BURNING RANGE** is above the FORGING RANGE, BURNED steel *cannot be cured* except by remelting.

⑧ **STRESS RELIEVING** consists of heating to a range definitely below the LOWER CRITICAL TEMPERATURE, holding for one hour or more per inch of thickness, then slowly cooling. Purpose is to allow the steel to relieve itself of locked-up stresses.

Figure 70—Basic guide to ferrous metallurgy. (Sheet 2 of 3.)

⑨ **BLUE BRITTLE RANGE** occurs approximately at 300° to 700° F., in which range steels are more brittle than above or below this range. Peening or working of steel should not be done in this range.

⑩ **PREHEATING FOR WELDING** is carried out to prevent crack formation.

⑪ **CARBURIZING** consists of dissolving carbon into surface of steel by heating to above critical range in presence of carburizing compounds.

⑫ **NITRIDING** consists of heating certain *special steels* to about 1,000° F. for long periods in the presence of ammonia gas. Nitrogen is absorbed into the surface to produce extremely hard "skins."

⑬ **SPHEROIDIZING** consists of heating to just below the critical range to put the CEMENTITE constituent of PEARLITE in globular form. This produces softness and in many cases good machinability.

Figure 70—Basic guide to ferrous metallurgy. (Sheet 3 of 3.)

7. Transition Temperature.—Metals may fail by brittle fracture or by ductile fracture. Some fractures have both ductile and brittle portions, the latter being at the center of the fracture where the crystals have been most constrained by surrounding metal. Temperature will influence the character of a fracture in metals. At subzero temperatures some metals, including iron and steel, pass through a transition range below which there is a marked tendency toward brittleness. Notched specimens are favored for determining the transition range, which differs for each metal and the type of test specimen.

The variation of impact energy with temperature for pearlitic steels generally has the form shown in figure 71. There is a range of temperature in which the impact energy suddenly decreases. The type of fracture changes from a fibrous to a bright crystalline one. This transition from a ductile shear type to a brittle (also called cleavage-type) fracture, generally occurs in a range of temperature from +210° to —150° F. Transformation at higher temperature, with a coarser pearlite, will in general decrease the ductile impact energy and raise the transition temperature. Steels made by different practices and processes will show different impact energies above the transition zone. The three most important elements tending to produce a brittle type of fracture are reduced temperature, increased rate of loading, and increased restraint. Generally, the temperature at which there is a transition from ductile to brittle fracture in unwelded plate is raised by welding.

A brittle weld fractures without deformation. The embrittling effect of notches in a metal is due to the biaxial and triaxial tensile stresses generally created in their vicinity on the application of load. These stresses, acting simultaneously in two or three directions at right angles to each other, prevent slip and cause brittleness leading to fracture as one plane of atoms loses its grip on an adjacent plane.

Apart from the effect of temperature on the ability of the crystal planes to slip on each other, there is generally a change in type of fracture at a temperature corresponding to recrystallization. Below the recrystallization temperature the path of fracture runs through the grains and above this temperature it runs along the grain boundaries.

8. Welding Stresses.—The stresses which develop in a weld and welded structure are of two types, designated as residual stresses and reaction stresses. Residual stresses are due to the

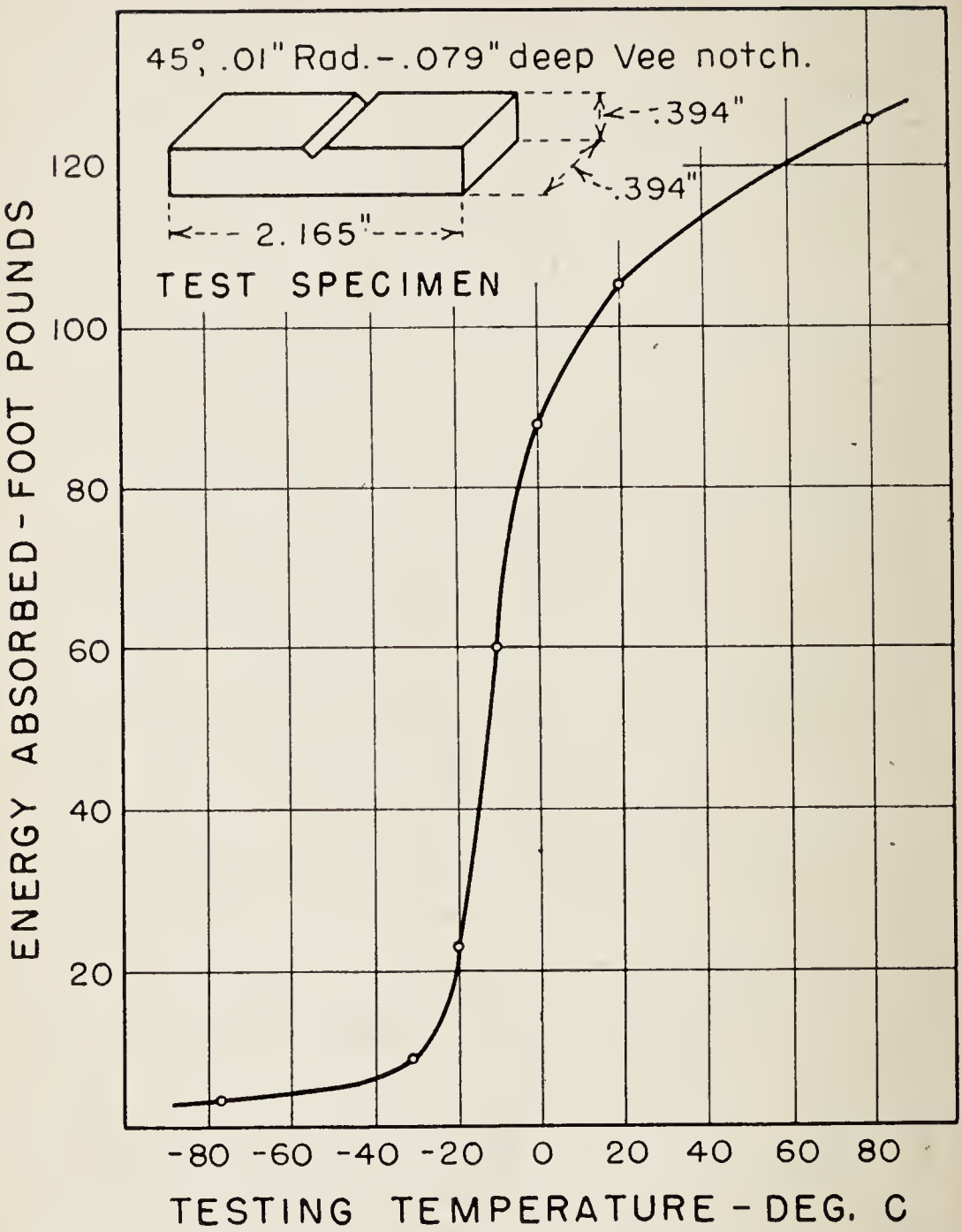

Figure 71—Typical relation between testing temperature and Charpy impact resistance.

contraction of the weld metal when cooling, which draws on the base metal to which it is fused. Owing to the resistance of the base metal adjacent to the weld, the stress parallel to the joint is usually the greatest. The stresses normal to the joint are dependent on the width of the weld, the thickness of the plate, and the degree of restraint. If the surrounding parts offer considerable resistance to distortion, the residual stresses are increased because of such restraint. The degree of rigidity of the structure is therefore one of the principal factors affecting the magnitude of the residual stresses.

Material which remains entirely elastic up to the breaking point will never retain any residual stress. It may eventually fail if the heat input imposes upon it a stress which exceeds the ultimate strength. Under usual working conditions some of the steels exhibit considerable plastic yield before breaking. At room temperature the strain remains purely elastic only up to about 0.1 percent elongation. With an increase in stress slightly above the elastic limit the strain suddenly becomes plastic and, with little or no additional increase in stress, may increase to more than 10 times the value it had just below the elastic limit. Above a temperature of 900° F. there is no longer a definite elastic limit because of the creep phenomenon, and it is doubtful whether steel can have any elastic strain at all above 1,200° F.

Reaction stresses are stresses within the assembly under consideration, due to the stresses between that assembly and the rest of the structure. For example, a tensile stress will develop across a welded butt joint during cooling if the normal thermal expansion and contraction are prevented by external transverse restraint.

In all welds the stresses tend to be triaxial in nature. The stresses in the third direction, however, except in very thick material, are very small so that the stress system is essentially two-dimensional. Theoretically, the ability of the material to exhibit plastic flow will be materially reduced when triaxial stresses exist.

The question arises whether residual stresses are dangerous and, if so, for what service. Extensive tests have shown that where plastic flow can occur, even as little as ½ percent, residual stresses have no effect upon the performance of structures subjected to static loading. The effect of residual stresses upon structures subject to dynamic loading and upon fatigue strength is not known with certainty. Some evidence points to the possibility that their effect may be harmful under such conditions.

The extent to which residual stresses may be controlled during welding is very limited. If welds are located at points having the least rigidity the stresses may be kept to the lowest possible magnitude. Residual stresses can also be reduced if welds are kept short which, however, is seldom feasible.

A structure having residual stresses approaching the yield point of the material will yield slightly with a slowly applied additional load if the structure is not too rigid to prevent such yielding. Any yielding will automatically relieve a por-

tion of the stress, but some distortion will remain. Members of great rigidity may crack in or near the weld, either during or immediately after welding. This is especially true if a member is made of metal which has a yield point close to the ultimate strength. Cracking may be prevented by preheating and by using a welding sequence which is adapted to the particular kind of restraint, whether the member is ultimately stress-relieved or not. Intermittent welding is often found advantageous in such cases because it reduces the concentration of stresses adjacent to the weld.

9. Thermal Stress Relieving.—The most common method of stress relieving is by heat treatment. Maximum temperatures generally used for carbon steels range from 1,100° to 1,250° F. At these temperatures, the yield point will temporarily be reduced to approximately 8,000 pounds per square inch and stresses above the 8,000 pounds per square inch yield point will be relieved by plastic flow in the steel. To accomplish the desired result, the member should be heated uniformly and held at the required temperature a sufficient length of time to permit plastic flow to take place. Any furnace capable of uniform heating under automatic temperature control is satisfactory for the treatment. Care must be taken to provide adequate interior and exterior supports to prevent distortion of the members, and to permit free temperature movement during the heating and cooling cycle. Temperatures in the furnace should not exceed 600° F. when the part is placed in it. The rise in temperature must be gradual, and the rate of heating should be such that all parts are heated throughout their thickness at a uniform rate not exceeding 400° per hour above 600° F. The length of time the member should be held at the maximum or soaking temperature depends upon the thickness of the parts, and is commonly 1 hour per inch of thickness for pressure vessels, pipe sections, and other structures of carbon steel having uniform thickness or a uniform degree of restraint. Reduction of the temperature must be gradual and at a rate which will insure uniform temperature throughout all parts. The temperature at which a member should be withdrawn from the furnace depends upon a number of conditions. Pressure vessels and pipes of uniform thickness may be withdrawn at 600° F. or the furnace may be opened at this temperature to permit more rapid cooling. More complex assemblies are brought to a lower temperature, in extreme cases to 200° F., before opening the furnace. A vessel or structure which is too large for the

furnace may, if desired, be stress-relieved in sections, with an overlap of at least 5 feet and with a maximum temperature gradient not in excess of 200° F. per foot along the structure. An automatic recording pyrometer should be used to record the temperature range for the stress-relieving cycle so that the inspector will have an assurance of the actual operation. This pyrometer should have contact with portions of the furnace that may vary in temperature.

10. Peening.—The deposited weld metal may be peened when it is deemed necessary to control distortion or relieve residual welding stresses. If peening is done at a dull red heat the grain size will be refined greatly. Below a dull red heat, peening cold-works the metal and, while increasing its strength, reduces its ductility. Cold-working distorts the grains and may cause cracks in the weld. In practice it is difficult to use peening at the required temperature unless the helper follows the welder at a proper distance with the peening tool.

Peening, in order to be effective, must move the weld metal and thus relieve residual stresses caused by welding. Section W–463 of the API-ASME Code (1951 edition) permits stress relieving by peening for vessels that are assembled in the field because they are too large for shop assembly and shipment to their destination. However, use of such peening is restricted to carbon steels with a specified minimum tensile strength not exceeding 65,000 pounds per square inch. In order to determine approximately the degree of peening required to overcome the weld shrinkage, a sample weld may be made between two plates, one held rigidly and one free to move as the weld shrinks. The peening required in the sample weld gives a fair idea of peening necessary in actual operation. In the actual weld, punch marks may be used across the weld and the distance between these kept within $\pm 1/32$ inch by peening during the welding of the seam, the initial measurement being made after two layers of weld metal have been deposited. This substitute for thermal stress relieving is discussed in some detail in appendix G of the API-ASME Code. When peening is used as an alternative to thermal stress relieving it is necessary to peen so that the distortion of the plates in the joint is kept to a minimum. No increase in joint efficiency, such as that permitted for thermal stress relieving, is allowed for peening.

244795—53——14

INDEX

Age hardening, 181
Air hardening, 181
Alloy cast iron and cast steels, 136
Alloying elements and their effects, 171
Alloy steels, 169
Alternating-current machines, 12
Aluminum
  alloys, 156, 157
  description, 172
  joining, 156
  metallizing, 164
  welding, 156
Applications of welding, 1
Arc
  cutting, 21, 23
  voltage, 10, 23
  welding procedures, 1, 23
Atomic hydrogen welding, 1, 23
Biaxial stresses, 194
Bibliography, 167
Bloom, 174
Bolted joints, 93
Brazing, 1, 27, 136
Brittle weld fractures, 197
Buildings and bridges
  joints, 96
  steel used, 97
  welding, 96
Butt joints, 5, 89
Butt straps, 90
Capped steel, 174
Carbon
  arc, 1, 27
  content, 4, 61
  description, 171
  effect of, 193
Carbon-arc cutting, 21, 27
Carbon steels, 169
Cast iron and cast steel, 135
Charpy test, 194
Chromium, 61, 172
Circumferential joints, 5, 89
Connections, flanged, 93
Control of peening, 15
Cooling after stress relieving, 200
Cooling, effect of, 192
Copper, 155
Copper silicon alloy, 155
Cracking in welds, 4, 18, 191
Crystal theory, 191
Cutting torch, 21, 30
Defects
  in weld profiles, 16
  repair of, 20
  unacceptable, 120
  welding, 16
Deseaming, 21
Dimensional check, 105
Direct-current machines, 10
Discard, 175
Dished heads, 107
Efficiency of welded joints, 89
Elastic strain, 199
Electrode holder, 31, 153
Electrode losses, 74
Electrodes
  classification, 62
  low alloy steel, 63
  mild steel, 63
  nickel or stainless steel, 135
  repairing steel castings, 20
  requirements, 74
  specifications, 83
  types, 31, 62
Elevated water tanks, 95

Eliminating weld build-up in stainless steels, 152
Elongation, 111
Embrittlement of welds, 4, 191
Etching, 129, 194
Face-bend test specimen, 111
Failure, theory of, 193
Filler metal, 2, 18, 32
Fillet welds, 32, 110
Fillet-weld soundness test specimen, 111
Firebox quality steel, 88
Flanged connections, 93
Flanges, 93
Fluorescent penetrant inspection, 127
Fractures, 193, 197
Free-bend test specimen, 110
Fusion-welded joints
  types, 5
  weld preparation, 5
Gamma ray, 118
Gas welding, 34, 160
Gates and machinery, 97
Girth joints, 89
Glossary of terms, 173
Glossary of welding terms, 22
Gouging, 21
Grain boundaries, 193
Grain refinement, 191
Gray cast iron, 136
Groove welds, 5, 34
Hammer test, 127
Hardening effect, 61
Hardness test, 179
Hard surfacing, 1
Heads, dished, 107
Heating, 200
Heat of welding, 2
Heat treatment of steel, 175
High-strength steels, 61
Hogging, 21
Hydraulic gates and machinery, 97
Hydrostatic pressure test, 126
Hydrostatic proof test, 127
Identification markers, 120
Impact tests
  Charpy, 194
  description, 179
  Izod, 194
Inert-gas metal-arc welding process, 37, 153
Inspection
  fluorescent penetrant, 127
  general, 102
  hydrostatic pressure test, 105
  loading, 134
  magnaflux, 124
  mill, 61, 101
  radiographic, 105, 118
  shop assembly and marking, 131
  specification requirements, 101
  steel pipe and tanks, 102
  structural steelwork, 107
  tolerance for steel pipe, 105
  welding in general, 102
Inspectors
  dimensional check, 105
  qualifications, 102
  responsibilities, 102
  scope of inspection, 102
  witnessing welding and tests, 102
Interpretation of radiographs, 121
Joining various metals
  aluminum, 156
  cast iron and cast steel, 135
  copper, 155
  copper silicon alloy, 155
  monel metal, 154
  reinforcing steel, 137
  silver soldering, 153
  stainless steel, 149
  thin sheet metal, 153
Joints
  bell and spigot, 90
  bolted (flanged), 93

Joints—Continued
butt-welded, 5
circumferential (girth), 90
design of, 37, 89
dished heads, 92
grooves for, 5
longitudinal, 89
preparation for, 10, 37
stagger in longitudinal joints, 92

Killed steel, 173

Lamination test, 180
Lap joints, 38, 90
Lead, 164
Loadings, 134
Longitudinal and transverse shear test, 111
Longitudinal joints, 89
Low alloy steels, 61

Machinery, hydraulic, 97
Macroscopic examination, 129
Macrostructure, 185
Magnaflux inspection, 124
Magnaflux powder, 124
Make-up section, 107
Malleable cast iron, 136
Manganese, 61, 171
Marking, 131
Martensite, 185, 192
Matching plates of unequal thickness, 107
Materials
building and bridges, 97
spiral cases, 100
steel pipe, 87
steel tanks, 96
Metal cutting, 20, 39
Metallizing
life expectancy of coating, 164
metals used, 164
spraying molten metal, 160
surface preparation, 161
Metallographic tests, 129
Method of testing specimens, 110, 115
Microscopic examination, 130
Microstructure, 186
Mill inspection, 61, 101
Mill length, 186
Mill test reports, 61
Miscellaneous terms, 181
Molybdenum, 61, 163, 172
Monel metal, 154
Nickel, 61, 172
Nitrogen, 2
Normalizing, 177
Notch effect, 201
Notch sensitivity, 186
Notch toughness, 186, 194
Number of test welds required, 110
Offsets, 92
Oil storage tanks, 94
Ordering plates, 170
Out-of-roundness
dished heads, 107
pipe shells, 106
Over-all length of pipe sections, 105
Oxygen, 2, 40
Oxygen cutting, 21, 41
Oxygen machining, 21
Peening, 15, 42, 201
Penetrameters, 118
Phosphorus, 5, 172
Physical properties of metals, 177
Physical tests of metals, 179
Plastic flow, 194
Plate
cutting, 20
inspection, 61
matching, 107
offsets, 92
universal mill, 175
Plates, special quality, 170
Plug welds, 6, 42
Porosity, 16, 120
Preheating, 18, 42, 61, 90, 191
Preparation of test plates, 102

Procedure test, 108
Proof hydrostatic test, 126
Qualification of welders, 112
Qualification of welding procedure, 108
Quality plates, 170
Quenching of welds, 192
Radiographic inspection
gamma ray, 118
identification, 120
inspection, 105, 118
interpretation, 121
records, 122
X-ray, 118
Ratings of welding machines, 12
Reaction stresses, 44, 199
Records of test results, 112, 116
Records of welder's tests, 116
Reduced section tension specimen, 110
Reinforcement of welds, 44, 107
Reinforcing steels
type of, 137
welding, 137
Repair of welding defects, 20
Reports of inspectors, 102
Residual welding stresses, 13, 44
Retests, 116
Rimmed steel, 174
Riveting, 15
Rolling data, 169
Root-bend test specimen, 111
Scarfing, 21, 45
Seams (see joints), 45
Semi-killed steel, 174
Shop assembly, 131
Side-bend test specimen, 111
Silicon, 171
Silver soldering, 154
Slag inclusions, 18, 48, 122
Slip in crystals, 193, 197
Soldering, 1, 154
Spacing of support rings, 106
Special quality plates, 170
Spiral cases, 100
Spot checking of welds, 108
Spray welding, 1, 160
Steel making practice, 169
Steel making terms, 173
Steel pipe
flanged connections, 93
joint design, 89
joint efficiencies, 89
shell thickness, 87
stamping, 82
steels used, 88
stiffeners and supports, 88
stresses, 88, 178
tolerances, 105
Steels
austenitic type stainless, 150
capped, 174
heat treatment of, 175
killed, 173
physical properties, 177
reinforcing steel, 137
rimmed, 174
semi-killed, 174
straight chromium types, 149
types of, 61
Strain, 178
Stress concentration, 194
Stress relieving, 49, 62, 90
Structural quality steel, 88
Subsurface defects, 125
Sulfur, 5, 173
Surfacing, 49, 159
Surge tanks, 95
Tack-welds, 16, 50
Tanks
joints, 95
shell, 95
steel used, 96
types of, 94
Tapered joints, 92, 107
Temperatures used, 105, 200
Tensile strength, 178
joints, 96, 110, 112
weld inspection, 96
Test plates, 110

Tests
fillet-weld, 112
free-bend, 112
hammer, 127
hydrostatic, 126
impact, 194
lamination, 180
longitudinal or transverse shear, 112
method of, 115
physical, 179
procedure, 112
records, 112
reduced-section tension, 112
results required, 112, 115
root- and face-bend, 112
side-bend, 112
welders, 112
welding procedure, 108

Test specimens
fillet-weld, 111
free-bend, 110
reduced section tension, 110
root- and face-bend, 111
side-bend, 111

Theory of failure, 193

Thermal stress relieving
temperature gradient, 201
temperature used, 200
soaking time, 200

Titanium, 172

Tolerances for steel pipe
clearances in bell-and-spigot joints, 106
clearances in expansion joints, 106
continuity of adjoining plates, 106
dished heads, 107
matching plates of unequal thickness, 107
out-of-roundness of shells, 106
over-all length of sections, 105

Tolerances, steel pipe—Continued
spacing of support rings, 106
trueness of ends of sections, 106
underground pipe lines, 107
weld reinforcement, 107

Transition temperature, 197

Triaxial stresses, 199

Two-pass submerged arc welding, 4

Types of joints, 5

Types of steels, 61

Unacceptable defects, 120

Unionmelt automatic welding process, 3

Universal mill plates, 175

Vanadium, 172

Visual inspection
deficiencies in weld sizes, 16
pipe and tank welding, 102
structural steel work, 107
welding test plates, 102
welds, 118

Water tanks, 95

Weld
cracking, 4, 18
deposits, 3
embrittlement, 4
porosity, 16, 120
profiles, 16
reinforcement,16, 107
repair, 20
structural discontinuities, 16
tack, 16
undercuts, 19

Weldability, 53, 61

Welders
certificates, 116
employment record, 116
method of testing specimens, 115
period of effectiveness of tests, 116
records of tests, 116
retests, 116

Welders—Continued
test procedure, 112
test results required, 115
tests, 112
Welding
amount of, 87
codes, 81
defects, 16, 20
design, 87
equipment, 10, 54
grooves, 5
inspection, 102
machines, 10, 54
metallurgy, 191
methods and procedures, 1, 54
positions, 5, 42
procedure tests, 108
Welding—Continued
specifications, 82
stainless steel, 149
steel tanks, 94
stresses, 13, 197
stringer beads, 15
symbols, 55
terms, 22
weave beads, 15
Welding quality steels, 61
White cast iron, 136
Witnessing tests, 105
X-ray inspection, 118
X-ray versus gamma ray, 118
Yield point, 178
Yield strength, 178
Young's modulus, 194
Zinc, 164

O